YAMAHA

PARTS CATALOGUE

YZ250FN (5NL1) USA
YZ250F (5NL2) EUROPE
YZ250F (5NL3) JAPAN
YZ250FN (5NL4) OCEANIA, CANADA, SOUTH AFRICA

YAMAHA GENUINE Parts & Accessories

215NL–100E1

A2

A3

FOREWORD

This Parts Catalogue is related to the parts for the model(s) in the below frame. When you are ordering replacement parts, please refer to this Parts Catalogue and quote both part numbers and part names correctly.

YZ250FN(5NL1/5NL4), YZ250F(5NL2/5NL3)

1. Modifications or additions which have been made after issue of the Parts Catalogue will be announced in the Yamaha Parts News.
   It is advisable that you make necessary corrections to the Parts Catalogue according to the Yamaha Parts News.
2. Abbreviations
   The Following abbreviations are used in this Parts Catalogue.
   - "UR" Use specified parts number.
   - "UN" Use as many as needed.
   - "AP" Alternate Parts
   - "LM" Local Made (Parts need to be ordered locally)
   - "F#" Frame No. (Applicable machine No.)
3. Parts, which are to be supplied in an assembly, are listed with a dot(.) in front of the part name as shown below.

   EXAMPLE

   CARBURETOR ASSY
   .JET, PILOT
   .NOZZLE, MAIN
4. Number of component for assembly
   The numeral appearing to the right of each component part indicates the quantity of parts for each assembly unit.

   EXAMPLE

PART NO.	DESCRIPTION	Q'TY	REMARKS
2F5–83310–60	FRONT FLASHER LIGHT ASSY	2	
115–83311–60	.BULB (6V–18W)	1	
1M1–83309–60	.REFLECTOR	1	

5. Applicable colors of graphics are represented in the "REMARKS" as shown below.

PART NO.	DESCRIPTION	Q'TY	REMARKS
2N4–24110–00–X5	FUEL TANK COMP.	1	MXR
3J1–24240–10	.GRAPHIC, FUEL TANK	1	FOR MXR

6. Applicable Serial No.

   Engine Serial No.

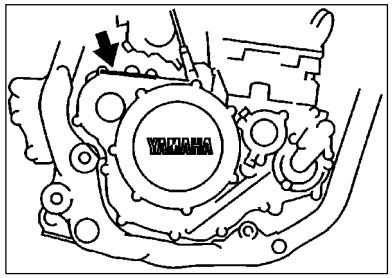

   Frame Serial No.

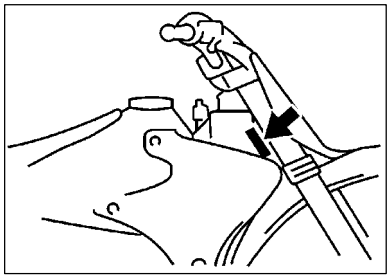

7. Note that the illustrations for reference in finding parts numbers, not to be used for assembling. When assembling, please use the applicable service manual.
8. The asterisk (*) before a reference number indicates modification items after the first edition.

MODEL LABEL

(1) A label called “Model Label” is affixed in the location as indicated in (3) below. When using this parts catalogue, please be sure to cross–refer the “model code – production code No.” in the catalogue to the “model code – production code No. “indicated on the Model Label affixed onto the product concemed.

(2) “Model Label”Indication

	a b
○	xxxx – xxx
●	x c

a: Model Type Code
b: Production Code No.
c: Colouring Type

○	4TW1–010
●	A

(3) Model Label Affixing Location

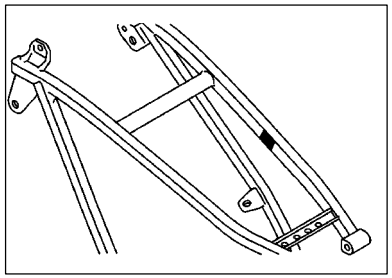

(4) Model Code – Production Code Number of Model Listed in This Parts Catalog

Model Code	Production Code No.	Country (destination)
5NL1	010	USA
5NL2	010	FRANCE
	020	BELGIUM
	030	GERMANY
	040	SPAIN
	050	FINLAND
		IRELAND
	060	ENGLAND
	070	GREECE
	080	ITALY
	090	PORTUGAL
	100	SWEDEN
5NL3	010	JAPAN
5NL4	010	AUSTRALIA
	020	CANADA

Model Code	Production Code No.	Country (destination)
5NL4	030	NEWZEALAND
	040	SOUTH AFRICA

(5) Colouring Information

Model Code	Colouring type code	Colour code	Colour Name	Abbrevi-ation
5NL1 5NL2 5NL3 5NL4	A	0583	DEEP PURPLISH BLUE SOLID E	DPBSE

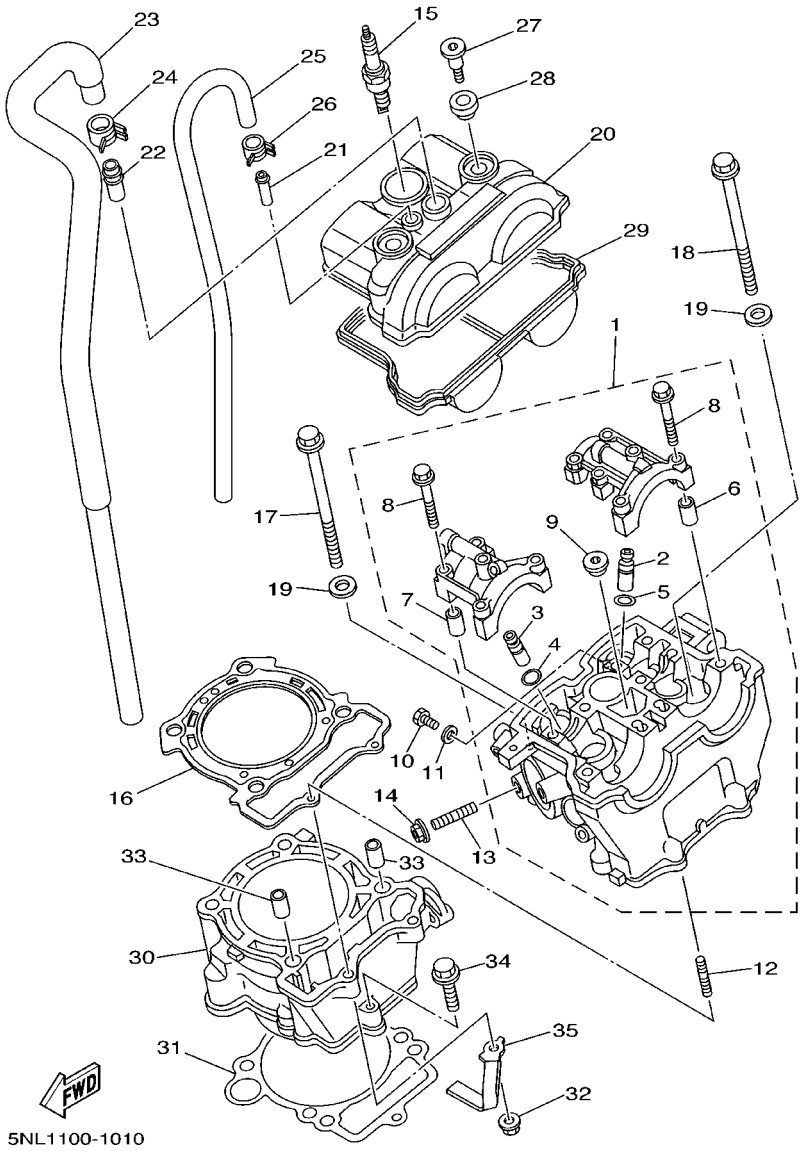

FIG. 1 CYLINDER

REF. NO.	PART NO.	DESCRIPTION	5NL1	5NL2	5NL3	5NL4		REMARKS
1	5NL–11102–00	CYLINDER HEAD ASSY	1	1	1	1		
2	5NL–11133–10	.GUIDE, INTAKE VALVE	3	3	3	3		
3	5NL–11134–10	.GUIDE, EXHAUST VALVE	2	2	2	2		
4	93440–10153	.CIRCLIP	2	2	2	2		
5	93440–07149	.CIRCLIP	3	3	3	3		
6	91808–16023	.PIN, DOWEL	2	2	2	2		
7	91808–16023	.PIN, DOWEL	2	2	2	2		
8	90105–067A6	.BOLT, WASHER BASED	10	10	10	10		
9	90340–12112	.PLUG, STRAIGHT SCREW	1	1	1	1		
10	95027–06012	BOLT, FLANGE	1	1	1	1		
11	90430–06014	GASKET	1	1	1	1		
12	90116–06541	BOLT, STUD	2	2	2	2		
13	95617–08620	BOLT, STUD	1	1	1	1		
14	95707–08500	NUT, FLANGE	1	1	1	1		
15	94701–00330	PLUG, SPARK (NGK CR8E)	1	1		1		STD
	94701–00329	PLUG, SPARK (U24ESR–N)	1	1		1		STD
	94701–00318	PLUG, SPARK (NGK R CR9E)	1	1		1		AP
	94701–00319	PLUG, SPARK (ND U27ESR–N)	1	1		1		AP
	94703–00330	PLUG, SPARK (NGK CR8E)			1			STD
	94703–00329	PLUG, SPARK (U24ESR–N)			1			STD
	94703–00318	PLUG, SPARK (NGK R CR9E)			1			AP
	94703–00319	PLUG, SPARK (ND U27ESR–N)			1			AP
16	5NL–11181–00	GASKET, CYLINDER HEAD 1	1	1	1	1		
17	90105–09555	BOLT, WASHER BASED	2	2	2	2		
18	90105–09002	BOLT, WASHER BASED	2	2	2	2		
19	90201–096J9	WASHER, PLATE	4	4	4	4		
20	5NL–11191–00	COVER, CYLINDER HEAD 1	1	1	1	1		

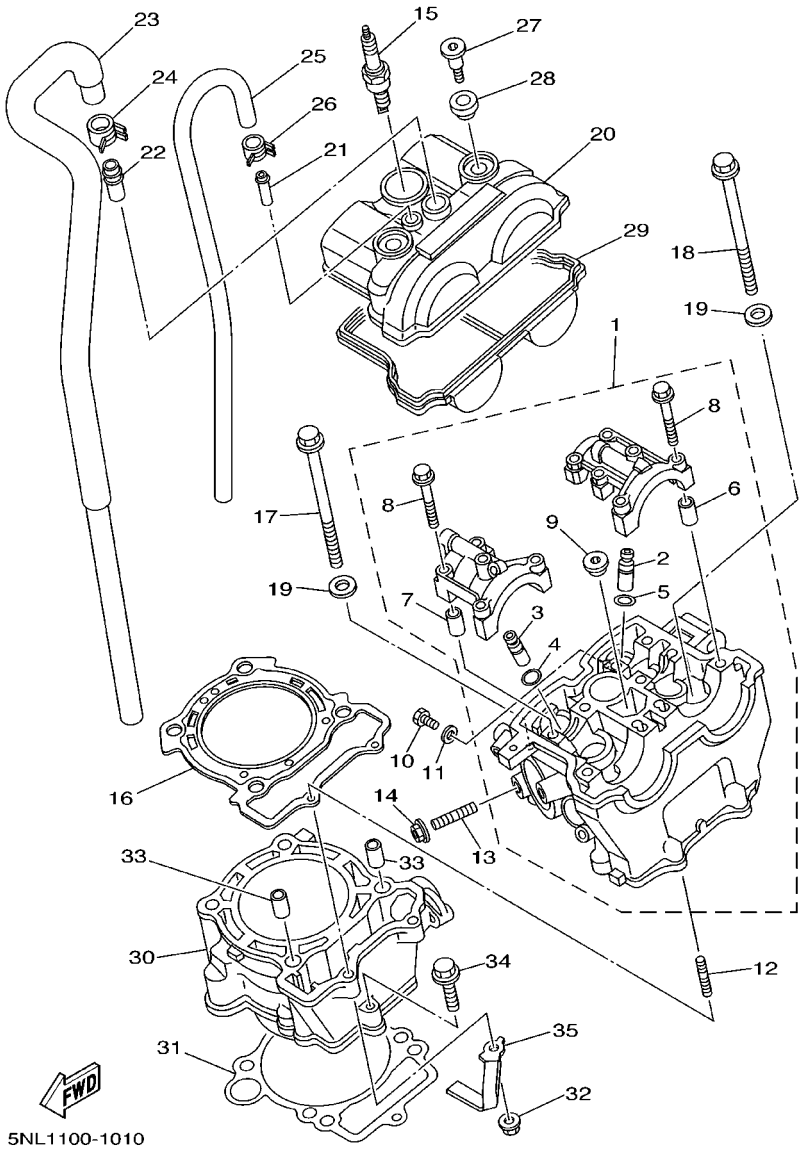

FIG. 1 CYLINDER

REF. NO.	PART NO.	DESCRIPTION	5NL1	5NL2	5NL3	5NL4		REMARKS
21	5BE–11167–00	PIPE, BREATHER 2	1	1	1	1		
22	371–11167–01	PIPE, BREATHER 2	1	1	1	1		
23	5BE–11166–00	PIPE, BREATHER 1	1	1	1	1		
24	90467–14015	CLIP	1	1	1	1		
25	90445–112K0	HOSE (L285)	1	1	1	1		
26	90467–11106	CLIP	2	2	2	2		
27	90109–066F0	BOLT	2	2	2	2		
28	4KG–1111G–00	RUBBER, MOUNT 1	2	2	2	2		
29	5NL–11193–00	GASKET, HEAD COVER 1	1	1	1	1		
30	5NL–11311–00	CYLINDER 1	1	1	1	1		
31	5NL–11351–00	GASKET, CYLINDER	1	1	1	1		
32	95704–06500	NUT, FLANGE	2	2	2	2		
33	93612–16254	PIN, DOWEL	2	2	2	2		
34	95027–06035	BOLT, FLANGE	1	1	1	1		
35	5JG–11387–00	CLAMP, HOSE 1	1	1	1	1		

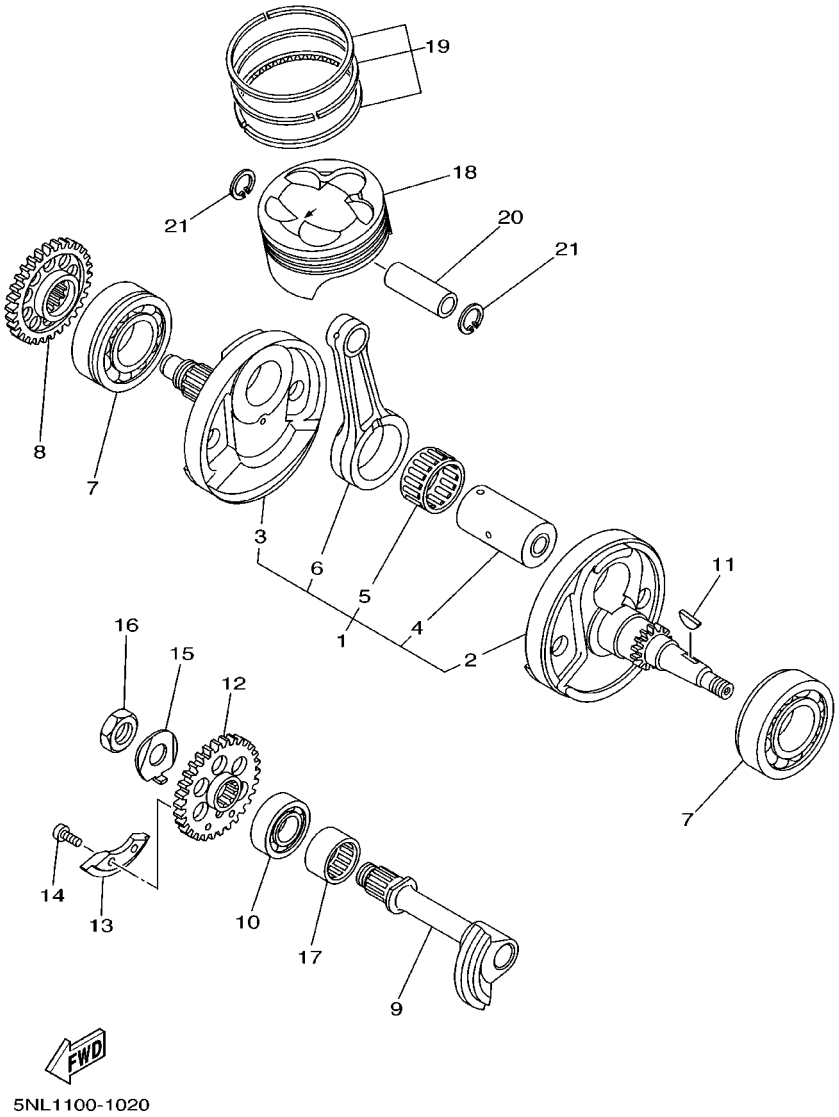

FIG. 2 CRANKSHAFT. PISTON

REF. NO.	PART NO.	DESCRIPTION	5NL1	5NL2	5NL3	5NL4		REMARKS
1	5NL–11400–00	CRANKSHAFT ASSY	1	1	1	1		
2	5NL–11412–00	.CRANK 1	1	1	1	1		
3	5NL–11422–00	.CRANK 2	1	1	1	1		
4	5NL–11681–00	.PIN, CRANK 1	1	1	1	1		
5	93310–63003	.BEARING	1	1	1	1		
6	5NL–11651–00	.ROD, CONNECTING	1	1	1	1		
7	93306–20648	BEARING	2	2	2	2		
8	5NL–11536–00	GEAR, DRIVE	1	1	1	1		
9	5NL–11455–00	SHAFT 1	1	1	1	1		
10	93306–20335	BEARING	1	1	1	1		
11	90280–03001	KEY, WOODRUFF	1	1	1	1		
12	5NL–11531–00	GEAR, BALANCE WT	1	1	1	1		
13	5NL–11454–00	WEIGHT 1	1	1	1	1		
14	90149–06250	SCREW	2	2	2	2		
15	90215–14204	WASHER, LOCK	1	1	1	1		
16	90170–14171	NUT	1	1	1	1		
17	93311–32261	BEARING	1	1	1	1		
18	5NL–11631–00	PISTON (STD)	1	1	1	1		
19	5NL–11603–00	PISTON RING SET (STD)	1	1	1	1		
20	5NL–11633–00	PIN, PISTON	1	1	1	1		
21	93420–16086	CIRCLIP	2	2	2	2		

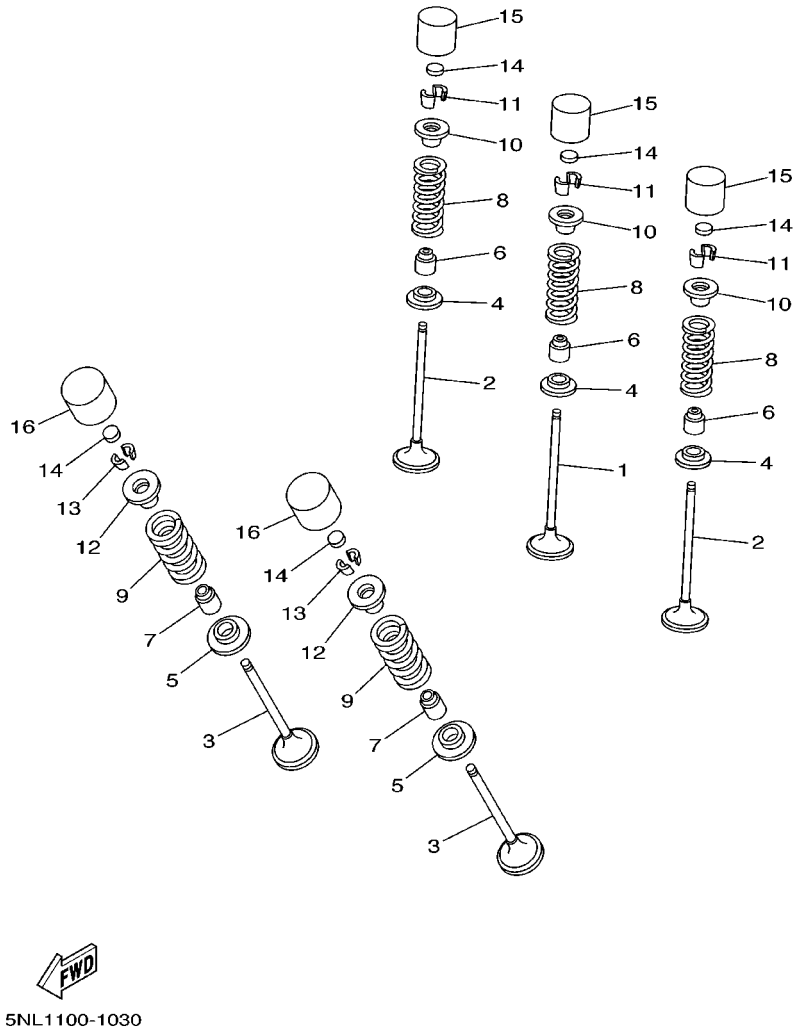

FIG. 3 VALVE

REF. NO.	PART NO.	DESCRIPTION	5NL1	5NL2	5NL3	5NL4		REMARKS
1	5NL–12111–00	VALVE, INTAKE	1	1	1	1		
2	5NL–12112–00	VALVE, INTAKE 2	2	2	2	2		
3	5NL–12121–00	VALVE, EXHAUST	2	2	2	2		
4	5NL–12116–00	SEAT, VALVE SPRING	3	3	3	3		
5	3GM–12126–00	SEAT, VALVE SPRING 2	2	2	2	2		
6	4TV–12119–00	SEAL, VALVE STEM	3	3	3	3		
7	4SV–12119–00	SEAL, VALVE STEM	2	2	2	2		
8	5NL–12113–00	SPRING, VALVE INNER	3	3	3	3		
9	5NL–12114–00	SPRING, VALVE OUTER	2	2	2	2		
10	1HX–12117–00	RETAINER, VALVE SPRING	3	3	3	3		
11	1HX–12118–00	COTTER, VALVE	6	6	6	6		
12	1WG–12117–00	RETAINER, VALVE SPRING	2	2	2	2		
13	1WG–12118–00	COTTER, VALVE	4	4	4	4		
14	1HX–12168–00	PAD, ADJUSTING 2 (1.20)	5	5	5	5		UR
	1HX–12168–20	PAD, ADJUSTING 2 (1.25)	5	5	5	5		UR
	1HX–12168–40	PAD, ADJUSTING 2 (1.30)	5	5	5	5		UR
	1HX–12168–60	PAD, ADJUSTING 2 (1.35)	5	5	5	5		UR
	1HX–12168–80	PAD, ADJUSTING 2 (1.40)	5	5	5	5		UR
	1HX–12168–A0	PAD, ADJUSTING 2 (1.45)	5	5	5	5		UR
	1HX–12168–F0	PAD, ADJUSTING 2 (1.50)	5	5	5	5		UR
	1HX–12168–H1	PAD, ADJUSTING 2 (1.55)	5	5	5	5		UR
	1HX–12168–K1	PAD, ADUSTING 2 (1.60)	5	5	5	5		UR
	1HX–12168–M1	PAD, ADJUSTING 2 (1.65)	5	5	5	5		UR
	1HX–12168–R1	PAD, ADJUSTING 2 (1.70)	5	5	5	5		UR
	1HX–12168–U1	PAD, ADJUSTING 2 (1.75)	5	5	5	5		UR
	1HX–12168–W1	PAD, ADJUSTING 2 (1.80)	5	5	5	5		UR
	1HX–12168–Y1	PAD, ADJUSTING 2 (1.85)	5	5	5	5		UR

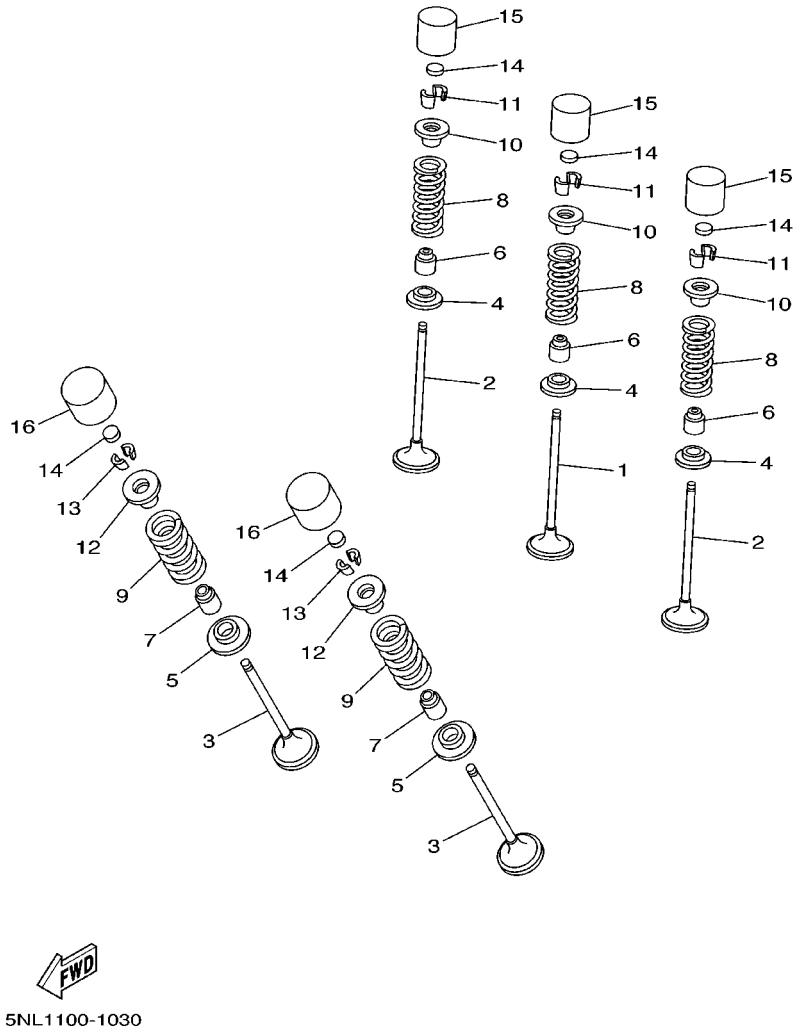

FIG. 3 VALVE

REF. NO.	PART NO.	DESCRIPTION	5NL1	5NL2	5NL3	5NL4		REMARKS
14	1HX–12169–11	PAD, ADJUSTING 2 (1.90)	5	5	5	5		UR
	1HX–12169–31	PAD, ADJUSTING 2 (1.95)	5	5	5	5		UR
	1HX–12169–50	PAD, ADJUSTING 2 (2.00)	5	5	5	5		UR
	1HX–12169–70	PAD, ADJUSTING 2 (2.05)	5	5	5	5		UR
	1HX–12169–90	PAD, ADJUSTING 2 (2.10)	5	5	5	5		UR
	1HX–12169–E0	PAD, ADJUSTING 2 (2.15)	5	5	5	5		UR
	1HX–12169–G0	PAD, ADJUSTING 2 (2.20)	5	5	5	5		UR
	1HX–12169–J0	PAD, ADJUSTING 2 (2.25)	5	5	5	5		UR
	1HX–12169–L0	PAD, ADJUSTING 2 (2.30)	5	5	5	5		UR
	1HX–12169–N0	PAD, ADJUSTING 2 (2.35)	5	5	5	5		UR
	1HX–12169–T0	PAD, ADJUSTING 2 (2.40)	5	5	5	5		UR
15	3LN–12153–00	LIFTER, VALVE	3	3	3	3		UR BLACK
	3LN–12153–10	LIFTER, VALVE	3	3	3	3		UR YELLOW
	3LN–12153–20	LIFTER, VALVE	3	3	3	3		UR BLUE
	3LN–12153–30	LIFTER, VALVE	3	3	3	3		UR RED
16	3FV–12153–00	LIFTER, VALVE	2	2	2	2		UR BLACK
	3FV–12153–10	LIFTER, VALVE	2	2	2	2		UR YELLOW
	3FV–12153–20	LIFTER, VALVE	2	2	2	2		UR BLUE
	3FV–12153–30	LIFTER, VALVE	2	2	2	2		UR RED

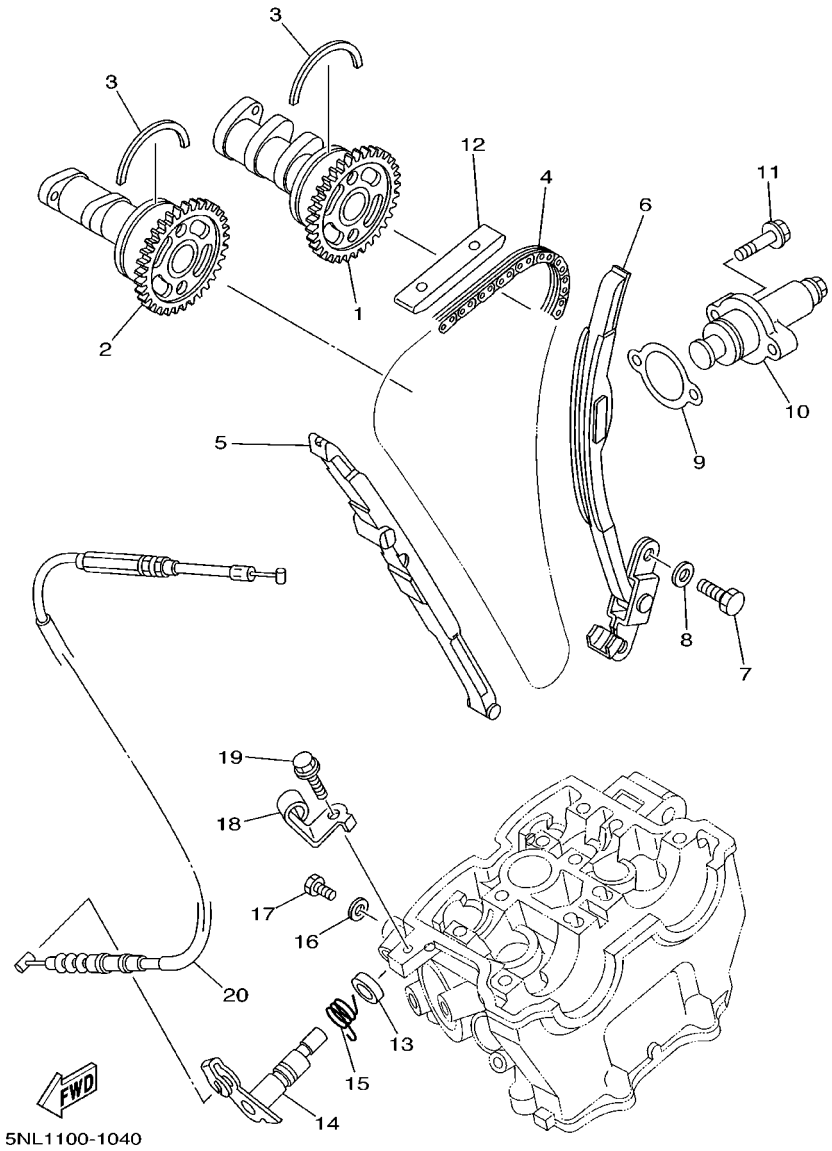

FIG. 4 CAMSHAFT. CHAIN

REF. NO.	PART NO.	DESCRIPTION	5NL1	5NL2	5NL3	5NL4		REMARKS
1	5NL–12170–00	CAMSHAFT ASSY 1	1	1	1	1		
2	5NL–12180–00	CAMSHAFT ASSY 2	1	1	1	1		
3	93440–41178	CIRCLIP	2	2	2	2		
4	94591–53114	CHAIN	1	1	1	1		
5	5NL–12251–00	DAMPER, CHAIN 1	1	1	1	1		
6	5NL–12252–00	DAMPER, CHAIN 2	1	1	1	1		
7	97027–06016	BOLT	2	2	2	2		
8	92907–06600	WASHER, PLATE	2	2	2	2		
9	4FM–12213–00	GASKET, TENSIONER CASE	1	1	1	1		
10	5BE–12210–00	TENSIONER ASSY, CAM CHAIN	1	1	1	1		
11	95027–06025	BOLT, FLANGE	2	2	2	2		
12	5BE–12241–00	GUIDE, STOPPER 2	1	1	1	1		
13	93102–12224	OIL SEAL	1	1	1	1		
14	5BE–12280–10	DECOMPRESSION ASSY	1	1	1	1		
15	90508–162B2	SPRING, TORSION	1	1	1	1		
16	90430–06014	GASKET	1	1	1	1		
17	90109–06418	BOLT	1	1	1	1		
18	5NL–12283–00	BRACKET, DECOMPRESSION	1	1	1	1		
19	95827–06014	BOLT, FLANGE	1	1	1	1		
20	5BE–12292–10	CABLE, DECOMPRESSION	1	1	1	1		

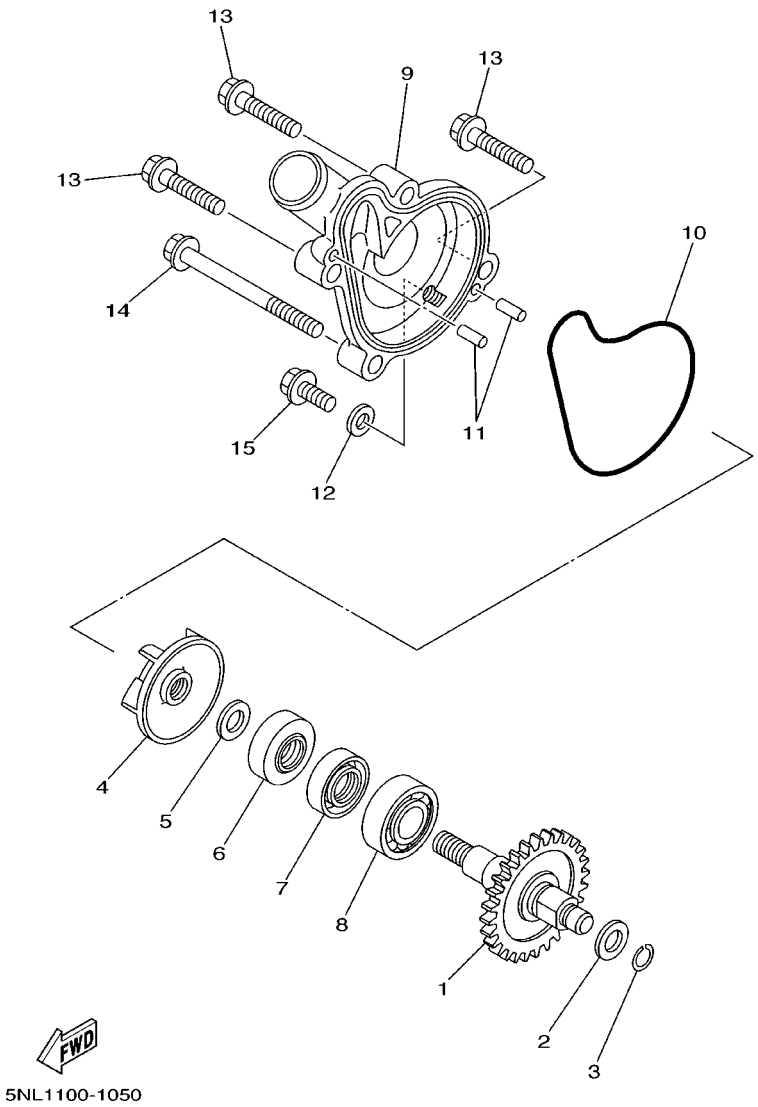

FIG. 5 WATER PUMP

REF. NO.	PART NO.	DESCRIPTION	5NL1	5NL2	5NL3	5NL4		REMARKS
1	5NL–12459–00	GEAR, IMPELLER SHAFT	1	1	1	1		
2	90201–08512	WASHER, PLATE	1	1	1	1		
3	93440–07182	CIRCLIP	1	1	1	1		
4	5DH–12451–00	IMPELLER, WATER PUMP	1	1	1	1		
5	90201–08512	WASHER, PLATE	1	1	1	1		
6	93109–11073	OIL SEAL	1	1	1	1		
7	93102–12106	OIL SEAL (SD 12–22–5 HS)	1	1	1	1		
8	93306–00105	BEARING (B6001)	1	1	1	1		
9	5NL–12422–00	COVER, HOUSING	1	1	1	1		
10	5NL–12439–00	O–RING	1	1	1	1		
11	93604–10011	PIN, DOWEL	2	2	2	2		
12	90430–06014	GASKET	1	1	1	1		
13	95027–06025	BOLT, FLANGE	3	3	3	3		
14	95027–06065	BOLT, FLANGE	1	1	1	1		
15	95027–06012	BOLT, FLANGE	1	1	1	1		

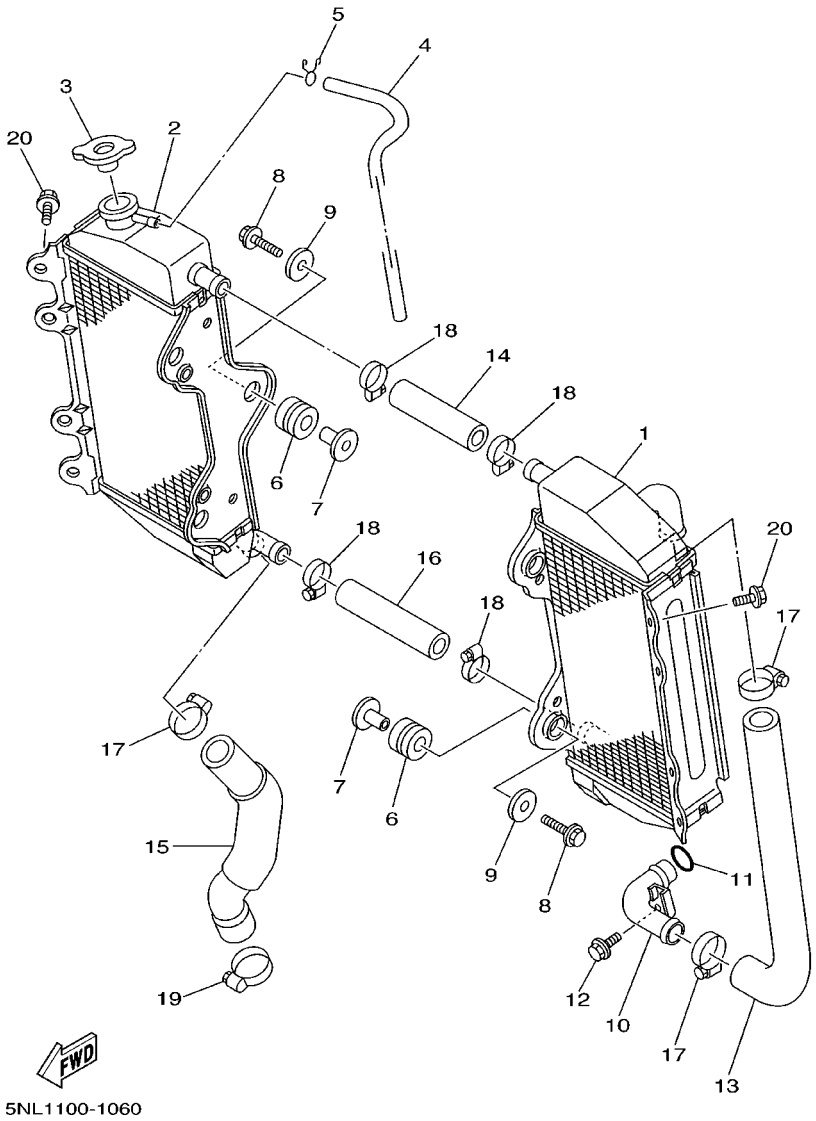

FIG. 6 RADIATOR. HOSE

REF. NO.	PART NO.	DESCRIPTION	5NL1	5NL2	5NL3	5NL4		REMARKS
1	5NL–1240A–00	RADIATOR ASSY	1	1	1	1		
2	5NL–12461–00	RADIATOR ASSY	1	1	1	1		
3	5HD–12462–00	CAP, RADIATOR	1	1	1	1		
4	91A20–05065	TUBE, FLEXIBLE VINYL	1	1	1	1		
5	90467–09006	CLIP	1	1	1	1		
6	90480–15528	GROMMET	6	6	6	6		
7	90387–0614M	COLLAR	6	6	6	6		
8	95027–06025	BOLT, FLANGE	6	6	6	6		
9	90201–06071	WASHER, PLATE	6	6	6	6		
10	5NL–12481–00	PIPE 1	1	1	1	1		
11	93210–15414	O–RING	1	1	1	1		
12	95027–06012	BOLT, FLANGE	1	1	1	1		
13	5NL–12576–00	HOSE 1	1	1	1	1		
14	5NL–12577–00	HOSE 2	1	1	1	1		
15	5NL–12578–00	HOSE 3	1	1	1	1		
16	5NL–12579–00	HOSE 4	1	1	1	1		
17	90450–25037	HOSE CLAMP ASSY	3	3	3	3		
18	90450–22017	HOSE CLAMP ASSY	4	4	4	4		
19	90450–32015	HOSE CLAMP ASSY	1	1	1	1		
20	95827–06010	BOLT, FLANGE	2	2	2	2		

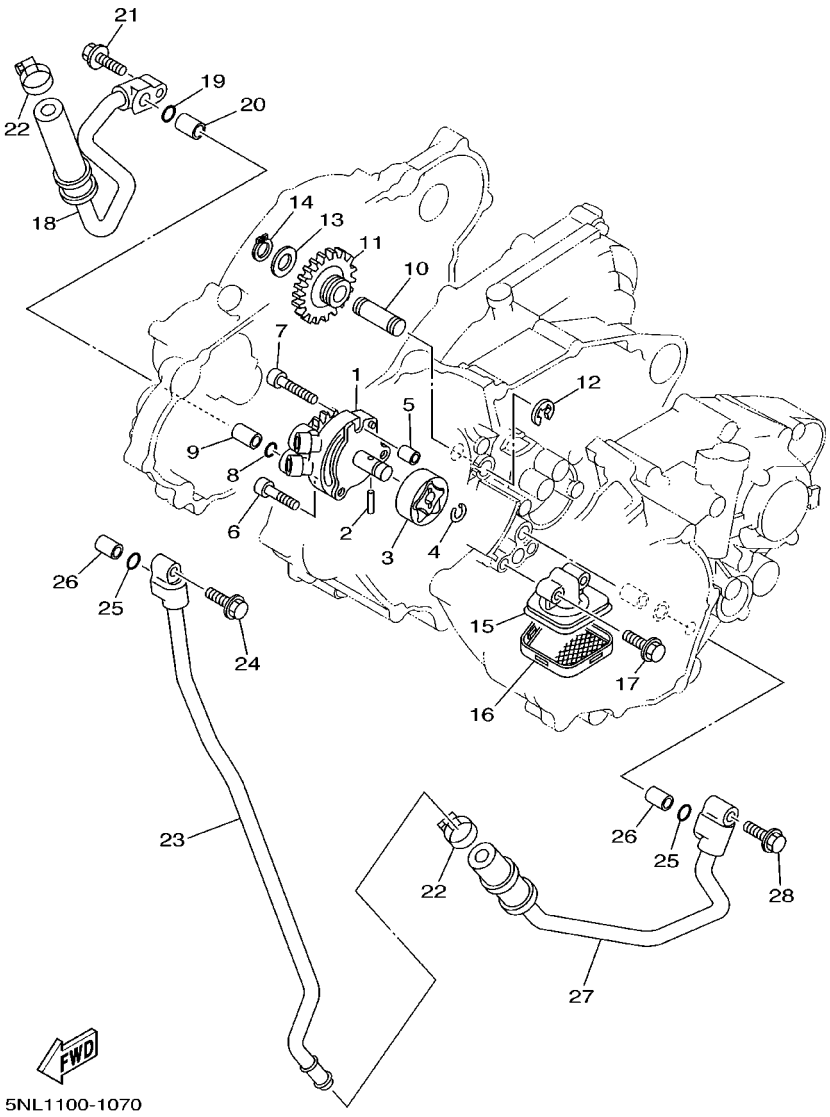

FIG. 7 OIL PUMP

REF. NO.	PART NO.	DESCRIPTION	5NL1	5NL2	5NL3	5NL4		REMARKS
1	5NL–13300–00	OIL PUMP ASSY	1	1	1	1		
2	93603–16219	PIN, DOWEL	1	1	1	1		
3	5NL–13320–00	ROTOR ASSY 2	1	1	1	1		
4	93440–10153	CIRCLIP	1	1	1	1		
5	99530–08012	PIN, DOWEL	1	1	1	1		
6	91317–06025	BOLT	2	2	2	2		
7	91314–06030	BOLT	1	1	1	1		
8	93210–10197	O–RING	1	1	1	1		
9	99530–10114	PIN, DOWEL	1	1	1	1		
10	5BE–13342–00	SHAFT, IDLE GEAR	1	1	1	1		
11	5NL–13341–00	GEAR, OIL PUMP IDLE	1	1	1	1		
12	99001–08600	CIRCLIP	1	1	1	1		
13	90201–12166	WASHER, PLATE	1	1	1	1		
14	99009–12400	CIRCLIP	1	1	1	1		
15	5NL–13412–00	HOUSING, STRAINER	1	1	1	1		
16	5NL–13411–00	STRAINER, OIL	1	1	1	1		
17	95027–06025	BOLT, FLANGE	2	2	2	2		
18	5NL–13464–00	HOSE, OIL 1	1	1	1	1		
19	93210–10197	O–RING	1	1	1	1		
20	99530–10114	PIN, DOWEL	1	1	1	1		
21	95027–06025	BOLT, FLANGE	1	1	1	1		
22	90450–22017	HOSE CLAMP ASSY	2	2	2	2		
23	5NL–13416–00	PIPE, OIL 1	1	1	1	1		
24	95024–06020	BOLT, FLANGE	1	1	1	1		
25	93210–10197	O–RING	2	2	2	2		
26	99530–10114	PIN, DOWEL	2	2	2	2		
27	5NL–13465–00	HOSE, OIL 2	1	1	1	1		

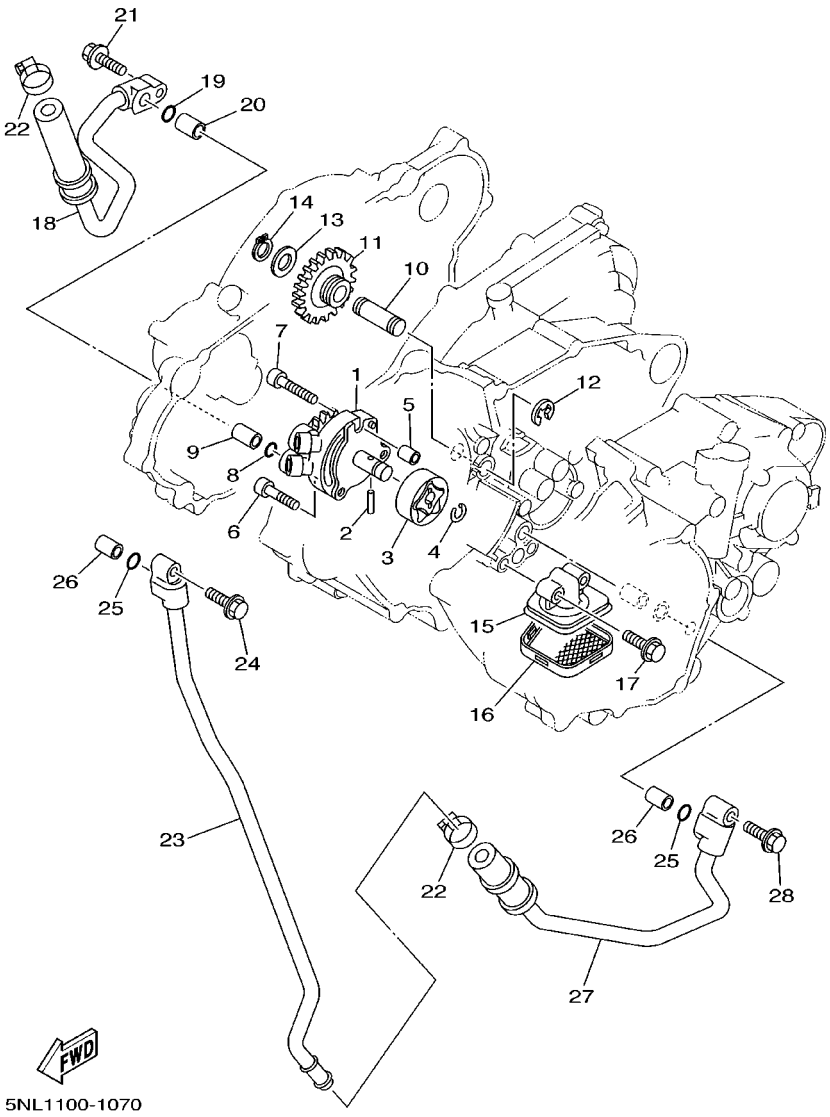

FIG. 7 OIL PUMP

REF. NO.	PART NO.	DESCRIPTION	5NL1	5NL2	5NL3	5NL4		REMARKS
28	95027–06025	BOLT, FLANGE	1	1	1	1		

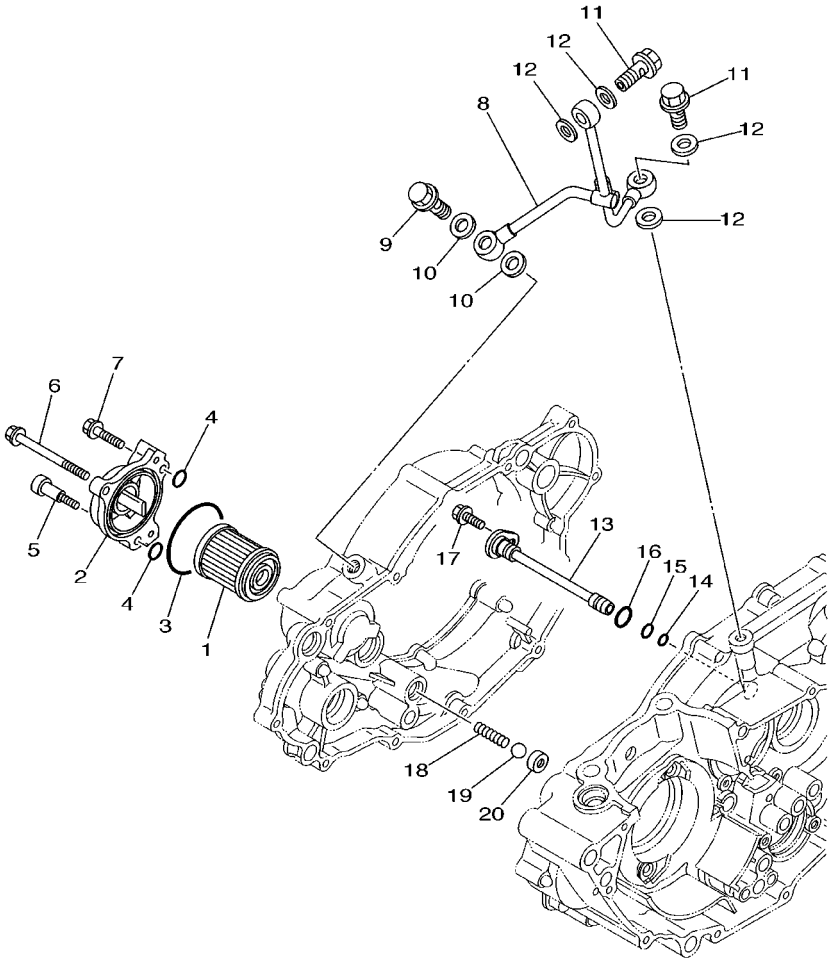

5NL1100-1080

FIG. 8 OIL CLEANER

REF. NO.	PART NO.	DESCRIPTION	5NL1	5NL2	5NL3	5NL4		REMARKS
1	1UY–13440–02	ELEMENT ASSY, OIL CLEANER	1	1	1	1		
2	5BE–13447–00	COVER, OIL ELEMENT	1	1	1	1		
3	93210–47675	O–RING	1	1	1	1		
4	93210–07135	O–RING	3	3	3	3		
5	90109–065G2	BOLT	1	1	1	1		
6	95027–06065	BOLT, FLANGE	1	1	1	1		
7	95027–06025	BOLT, FLANGE	1	1	1	1		
8	5NL–13161–00	PIPE, DELIVERY 1	1	1	1	1		
9	90401–10159	BOLT, UNION	1	1	1	1		
10	90430–10188	GASKET	2	2	2	2		
11	90401–08038	BOLT, UNION	2	2	2	2		
12	90430–08119	GASKET	4	4	4	4		
13	5NL–13171–00	PIPE, DELIVERY 2	1	1	1	1		
14	93210–07003	O–RING	1	1	1	1		
15	93210–09008	O–RING	1	1	1	1		
16	93210–12759	O–RING	1	1	1	1		
17	95027–06012	BOLT, FLANGE	1	1	1	1		
18	90501–043E0	SPRING, COMPRESSION	1	1	1	1		
19	93503–08007	BALL	1	1	1	1		
20	583–13113–00	SEAT, CHECK BALL	1	1	1	1		

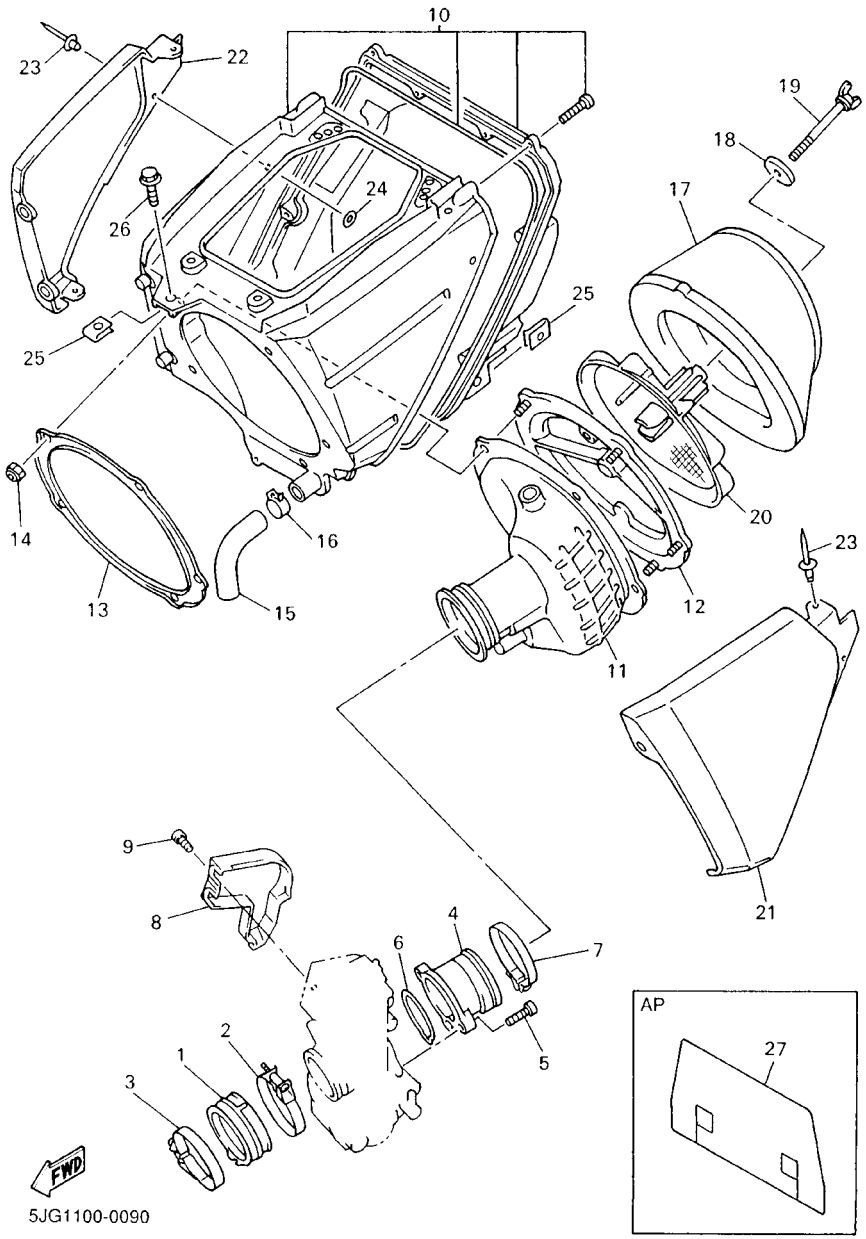

FIG. 9 INTAKE

REF. NO.	PART NO.	DESCRIPTION	5NL1	5NL2	5NL3	5NL4		REMARKS
1	5NL–13597–00	JOINT, CARBURETOR 3	1	1	1	1		
2	90450–57092	HOSE CLAMP ASSY	1	1	1	1		
3	90450–54093	HOSE CLAMP ASSY	1	1	1	1		
4	5JG–1440F–01	JOINT, AIR FILTER 1	1	1	1	1		
5	91317–05014	BOLT	2	2	2	2		
6	4FN–14561–00	O–RING	1	1	1	1		
7	90450–61001	HOSE CLAMP ASSY	1	1	1	1		
8	5JG–14293–01	COVER 1	1	1	1	1		
9	5JG–14428–00	BOLT	1	1	1	1		
10	5JG–14401–00	AIR CLEANER CASE ASSY	1	1	1	1		
11	5JG–14453–00	JOINT, AIR CLEANER 1	1	1	1	1		
12	3JD–14459–01	HOLDER, GUIDE	1	1	1	1		
13	5MV–14477–00	PLATE	1	1	1	1		
14	95607–05100	NUT, U	5	5	5	5		
15	5BE–1443E–00	PIPE, DRAIN	1	1	1	1		
16	90467–17089	CLIP	1	1	1	1		
17	4XM–14451–00	ELEMENT, AIR CLEANER	1	1	1	1		
18	90209–06096	WASHER	1	1	1	1		
19	90122–06035	BOLT, WING	1	1	1	1		
20	5BE–14458–00	GUIDE	1	1	1	1		
21	5BE–1441A–10	COVER, CLEANER CASE 1	1	1	1	1		
22	5BE–1441E–10	COVER, CLEANER CASE 2	1	1	1	1		
23	90267–32070	RIVET, BLIND	5	5	5	5		
24	90201–03313	WASHER, PLATE	5	5	5	5		
25	90183–06023	NUT, SPRING	2	2	2	2		
26	95027–06012	BOLT, FLANGE	1	1	1	1		
27	5JG–14417–00	COVER 1	1	1	1	1		AP

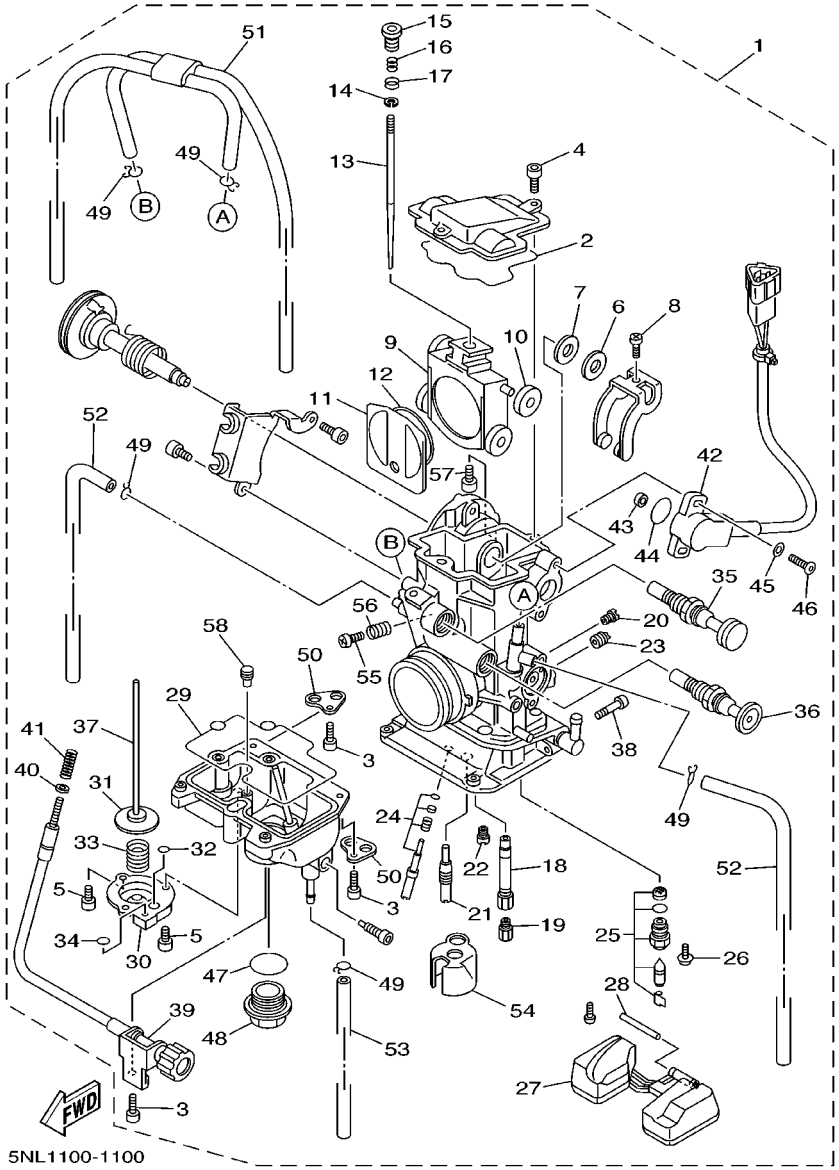

FIG. 10 CARBURETOR

REF. NO.	PART NO.	DESCRIPTION	5NL1	5NL2	5NL3	5NL4		REMARKS
1	5NL–14101–00	CARBURETOR ASSY 1	1		1	1		
	5NL–14101–10	CARBURETOR ASSY 1		1				
2	5JG–14959–00	.GASKET	1	1	1	1		
3	91316–04012	.BOLT	4	4	4	4		
4	91316–04012	.BOLT	2	2	2	2		
5	91316–04008	.BOLT	3	3	3	3		
6	90202–08045	.WASHER, PLATE	1	1	1	1		
7	5JG–14951–00	.WASHER	1	1	1	1		
8	5JG–14522–00	.SCREW, ADJUST	1	1	1	1		
9	5JG–14388–00	.VALVE, VACUUM CONTROL	1	1	1	1		
10	3TJ–14267–40	.ROLLER	1	1	1	1		
11	5JG–14546–00	.VALVE, NEEDLE	1	1	1	1		
12	4FN–14997–00	.SEAL	1	1	1	1		
13	5NL–14916–EP	.NEEDLE (#OBELP)	1		1	1		STD
	5NL–14916–EM	.NEEDLE (#OBELM)	1		1	1		AP
	5NL–14916–EN	.NEEDLE (#OBELN)	1		1	1		AP
	5NL–14916–E1	.NEEDLE (#OBELQ)	1		1	1		AP
	5NL–14916–ER	.NEEDLE (#OBELR)	1		1	1		AP
	5NL–14916–ES	.NEEDLE (#OBELS)	1		1	1		AP
	5NL–14916–EL	.NEEDLE (#OBELL)	1		1	1		AP
	5JG–14916–JP	.NEEDLE (#EJP)		1				STD
	5JG–14916–JS	.NEEDLE (#EJS)		1				AP
	5JG–14916–JR	.NEEDLE (#EJR)		1				AP
	5JG–14916–J1	.NEEDLE (#EJQ)		1				AP
	5JG–14916–JN	.NEEDLE (#EJN)		1				AP
	5JG–14916–JM	.NEEDLE (#EJM)		1				AP
	5JG–14916–JL	.NEEDLE (#EJL)		1				AP

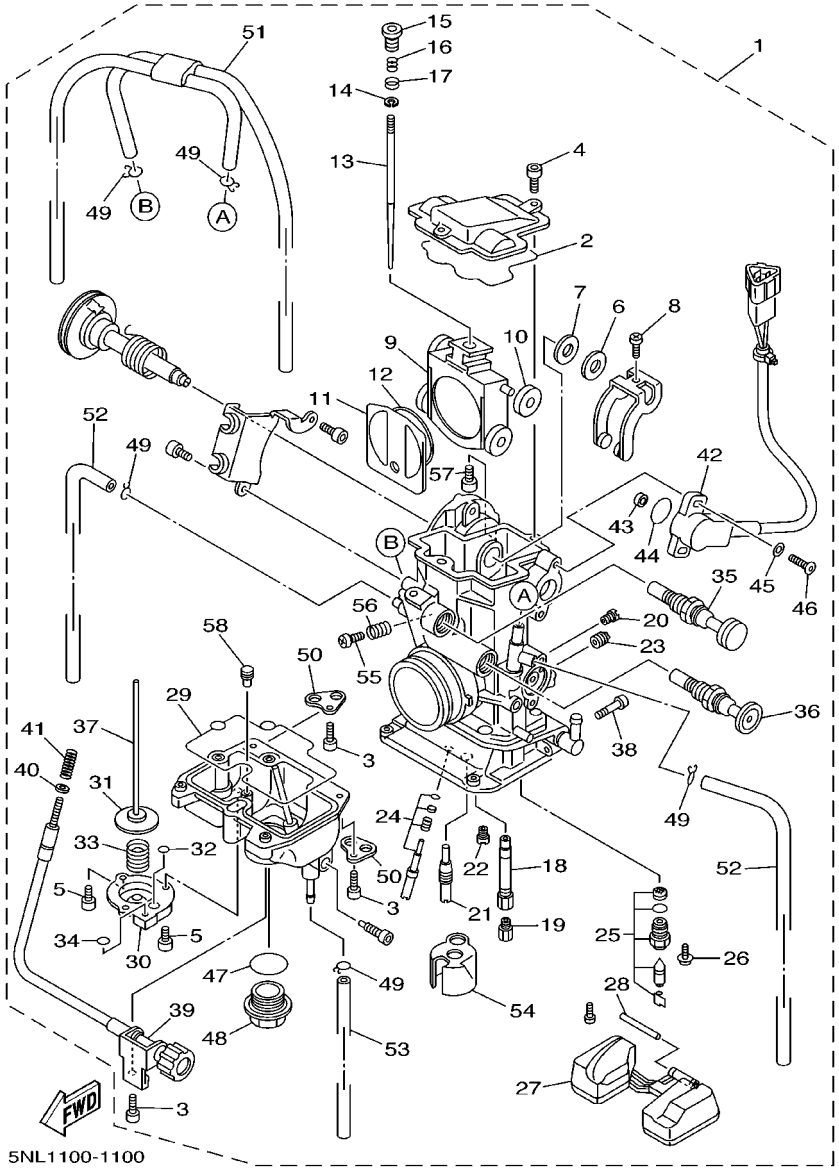

FIG. 10 CARBURETOR

REF. NO.	PART NO.	DESCRIPTION	5NL1	5NL2	5NL3	5NL4		REMARKS
14	3TJ–14159–40	.CLIP	1	1	1	1		
15	5JG–14521–00	.SCREW, ADJUST	1	1	1	1		
16	5JG–14275–00	.SPRING	1	1	1	1		
17	5JG–14264–00	.COLLAR	1	1	1	1		
18	5JG–14947–00	.NOZZLE, MAIN	1	1	1	1		
19	4MX–14943–42	.JET, MAIN (#175)	1	1	1	1		STD
	4MX–14943–40	.JET, MAIN (#165)	1	1	1	1		AP
	4MX–14943–91	.JET, MAIN (#168)	1	1	1	1		AP
	4MX–14943–41	.JET, MAIN (#170)	1	1	1	1		AP
	4MX–14943–92	.JET, MAIN (#172)	1	1	1	1		AP
	4MX–14943–93	.JET, MAIN (#178)	1	1	1	1		AP
	4MX–14943–43	.JET, MAIN (#180)	1	1	1	1		AP
	4MX–14943–94	.JET, MAIN (#182)	1	1	1	1		AP
	4MX–14943–44	.JET, MAIN (#185)	1	1	1	1		AP
	4MX–14943–95	.JET, MAIN (#188)	1	1	1	1		AP
	4MX–14943–45	.JET, MAIN (#190)	1	1	1	1		AP
20	3TJ–14943–47	.JET (#200)	1	1	1	1		
21	4MX–14948–04	.JET, SLOW (#42)	1	1	1	1		STD
	4MX–14948–01	.JET, SLOW (#35)	1	1	1	1		AP
	4MX–14948–02	.JET, SLOW (#38)	1	1	1	1		AP
	4MX–14948–03	.JET, SLOW (#40)	1	1	1	1		AP
	4MX–14948–05	.JET, SLOW (#45)	1	1	1	1		AP
	4MX–14948–06	.JET, SLOW (#48)	1	1	1	1		AP
	4MX–14948–07	.JET, SLOW (#50)	1	1	1	1		AP
22	3TJ–1494F–16	.JET (#72)	1	1	1	1		STD
	3TJ–1494F–12	.JET (#62)	1	1	1	1		AP
	3TJ–1494F–13	.JET (#65)	1	1	1	1		AP

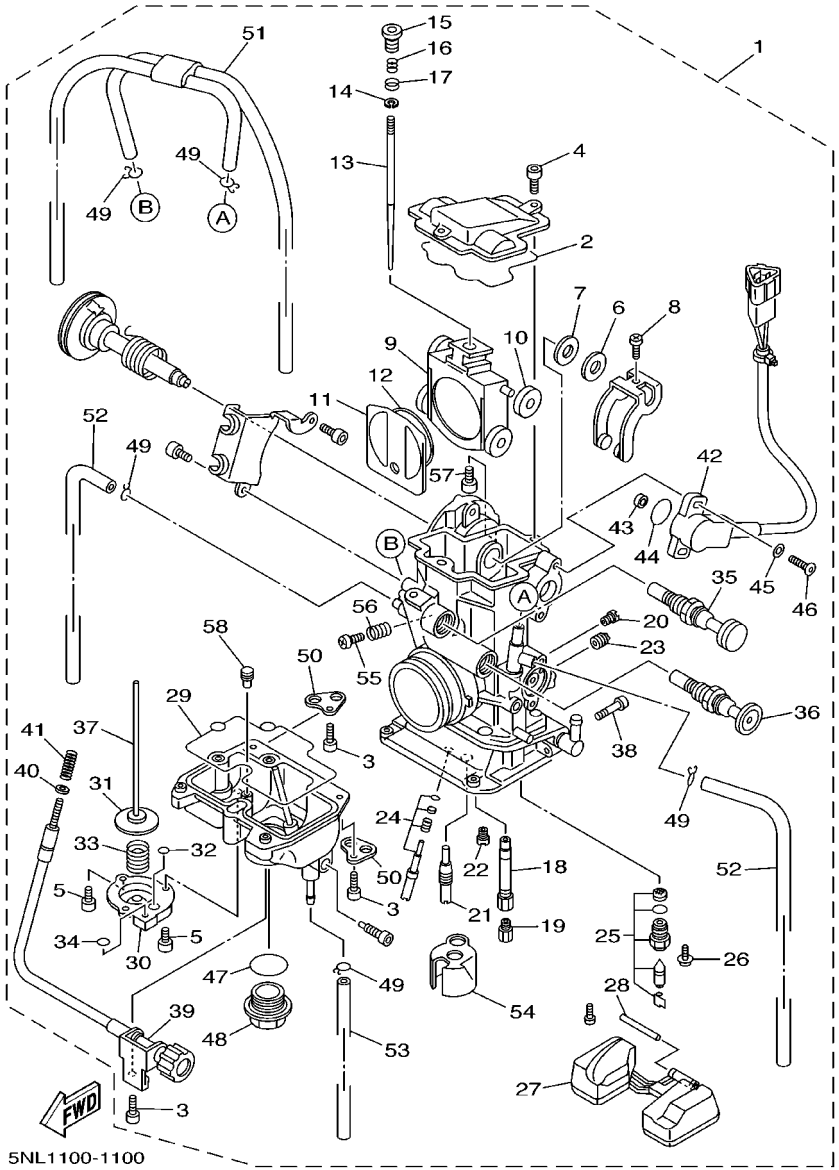

FIG. 10 CARBURETOR

REF. NO.	PART NO.	DESCRIPTION	5NL1	5NL2	5NL3	5NL4		REMARKS
22	3TJ–1494F–14	.JET (#68)	1	1	1	1		AP
	3TJ–1494F–15	.JET (#70)	1	1	1	1		AP
	3TJ–1494F–17	.JET (#75)	1	1	1	1		AP
	3TJ–1494F–18	.JET (#78)	1	1	1	1		AP
	3TJ–1494F–19	.JET (#80)	1	1	1	1		AP
	3TJ–1494F–20	.JET (#82)	1	1	1	1		AP
23	7A9–14943–27	.JET (#100)	1	1	1	1		
24	5NL–14105–00	.PILOT SCREW SET	1	1	1	1		
25	5BE–14107–00	.NEEDLE VALVE SET	1	1	1	1		
26	5BE–14216–00	.SCREW	1	1	1	1		
27	4SR–14985–00	.FLOAT	1	1	1	1		
28	676–14548–00	.PIN, FLOAT ARM	1	1	1	1		
29	5JG–14984–00	.GASKET, FLOAT CHAMBER	1	1	1	1		
30	3TJ–14293–40	.COVER 1	1	1	1	1		
31	5JG–14940–75	.DIAPHRAGM ASSY	1	1	1	1		STD
	5JG–14940–06	.DIAPHRAGM ASSY	1		1	1		AP
	5JG–14940–05	.DIAPHRAGM ASSY		1				AP
	5JG–14940–07	.DIAPHRAGM ASSY	1	1	1	1		AP
	5JG–14940–08	.DIAPHRAGM ASSY	1	1	1	1		AP
	5JG–14940–09	.DIAPHRAGM ASSY		1				AP
32	3TJ–14536–40	.GASKET	1	1	1	1		
33	3TJ–14933–40	.SPRING, DIAPHRAGM	1	1	1	1		
34	6H4–14561–00	.O–RING	1	1	1	1		
35	5JG–14171–00	.PLUNGER, STARTER	1	1	1	1		
36	5JG–14371–00	.PLUNGER, STARTER	1	1	1	1		
37	5JG–14379–00	.ROD, STARTER	1	1	1	1		
38	3TJ–14325–40	.SCREW, PAN HEAD	1	1	1	1		

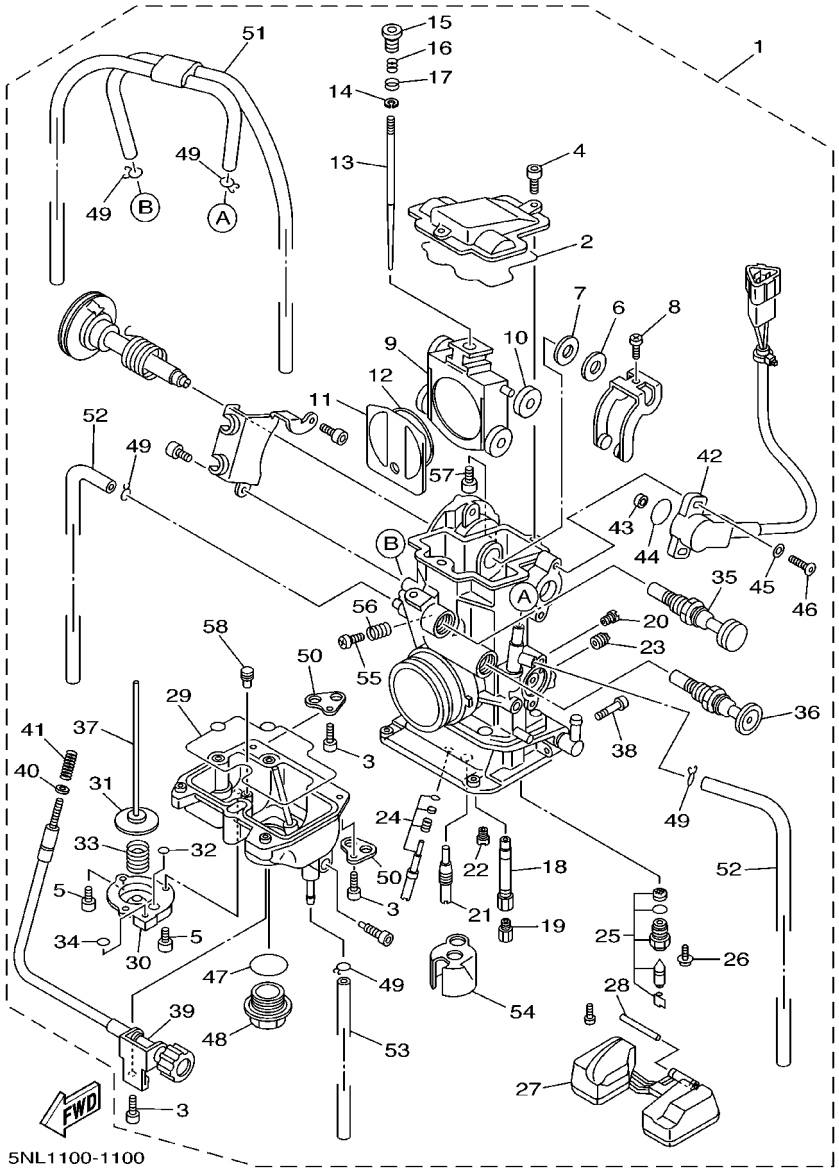

FIG. 10 CARBURETOR

REF. NO.	PART NO.	DESCRIPTION	5NL1	5NL2	5NL3	5NL4		REMARKS
39	5JG–14922–00	.SCREW, THROTTLE	1	1	1	1		
40	90201–08410	.WASHER, PLATE	1	1	1	1		
41	4FN–14934–00	.SPRING, THROTTLE STOP	1	1	1	1		
42	5JG–85885–00	.THROTTLE SENSOR ASSY	1	1	1	1		
43	5BE–14449–00	.COLLAR	1	1	1	1		
44	5BE–14562–00	.O–RING	1	1	1	1		
45	4YR–14557–00	.WASHER	2	2	2	2		
46	4YR–14216–00	.SCREW	2	2	2	2		
47	4MX–14561–00	.O–RING	1	1	1	1		
48	4MX–14115–00	.PLUG, SCREW	1	1	1	1		
49	3TJ–14137–40	.CLIP	5	5	5	5		
50	5BE–14146–00	.PLATE	2	2	2	2		
51	5NL–14196–00	.PIPE COMP.	1	1	1	1		
52	5JG–14197–00	.PIPE	2	2	2	2		
53	5JG–14987–00	.HOSE	1	1	1	1		
54	5JG–14346–00	.PLATE	1	1	1	1		
55	5JG–14565–00	.SCREW	1	1	1	1		
56	5JG–14531–00	.SPRING, ADJUST SCREW	1	1	1	1		
57	5NL–14591–00	.SCREW	1	1	1	1		
58	4JT–1494F–28	.JET (#105)	1	1	1	1		STD
	4JT–1494F–17	.JET (#75)	1	1	1	1		AP
	4JT–1494F–21	.JET (#85)	1	1	1	1		AP
	4JT–1494F–25	.JET (#95)	1	1	1	1		AP
	4JT–1494F–30	.JET (#115)	1	1	1	1		AP
	4JT–1494F–32	.JET (#125)	1	1	1	1		AP
	4JT–1494F–34	.JET (#135)	1	1	1	1		AP

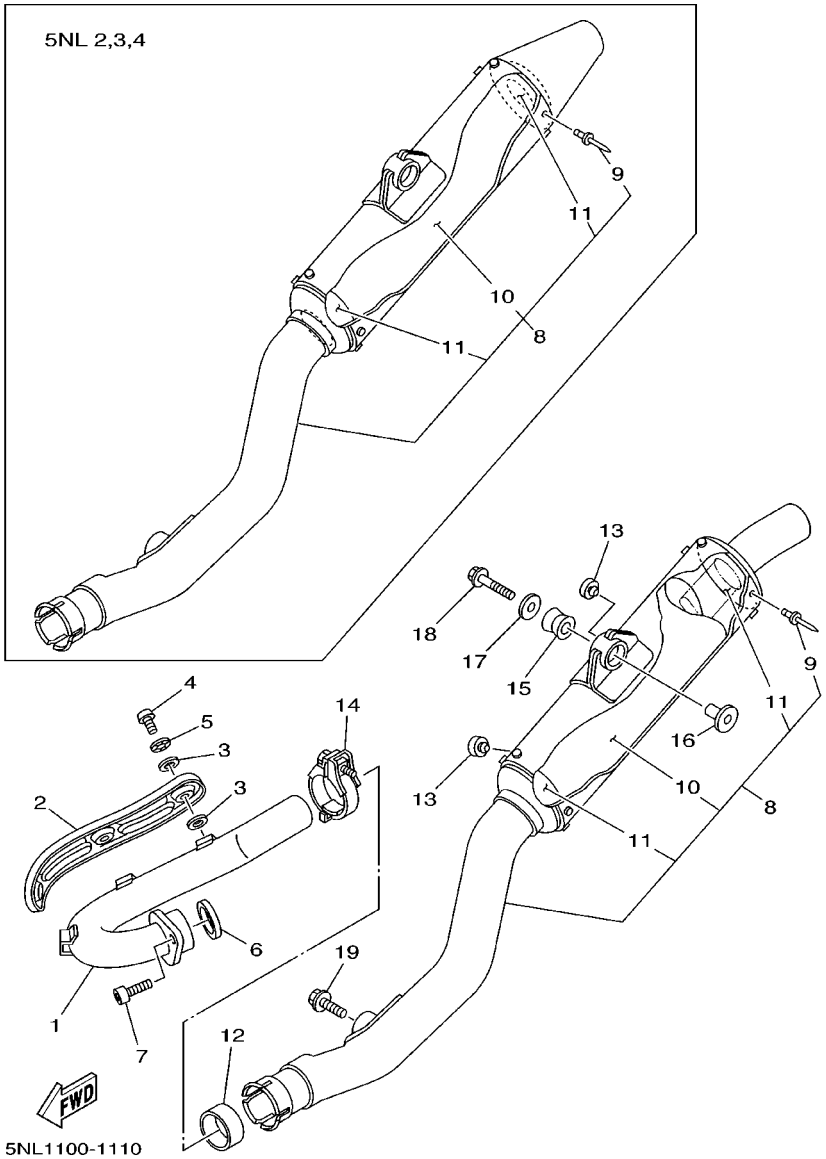

FIG. 11 EXHAUST

REF. NO.	PART NO.	DESCRIPTION	5NL1	5NL2	5NL3	5NL4		REMARKS
1	5NL–14611–00	PIPE, EXHAUST 1	1	1	1	1		
2	5NL–14628–00	PROTECTOR, EXHAUST PIPE	1	1	1	1		
3	4BD–14766–00	WASHER, PROTECTOR	6	6	6	6		
4	98980–06008	SCREW, BIND	3	3	3	3		
5	90206–06090	WASHER, WAVE	3	3	3	3		
6	5NL–14613–00	GASKET, EXHAUST PIPE	1	1	1	1		
7	91317–08020	BOLT	1	1	1	1		
8	5NL–14753–00	SILENCER, EXHAUST	1					
	5NL–14753–10	SILENCER, EXHAUST		1	1	1		
9	90267–48121	.RIVET, BLIND	16	16	16	16		
10	5NL–1469A–00	.FIBER	1	1	1	1		
11	5BE–1469E–00	.FIBER	2	2	2	2		
12	3VD–14755–00	GASKET, SILENCER	1	1	1	1		
13	22W–24181–00	DAMPER, LOCATING 1	2	2	2	2		
14	5NL–14788–00	BAND, SILENCER	1	1	1	1		
15	5BE–14747–00	DAMPER, MUFFLER	1	1	1	1		
16	90387–0814J	COLLAR	1	1	1	1		
17	90201–081R9	WASHER, PLATE	1	1	1	1		
18	95817–08030	BOLT, FLANGE	1	1	1	1		
19	95817–08016	BOLT, FLANGE	1	1	1	1		

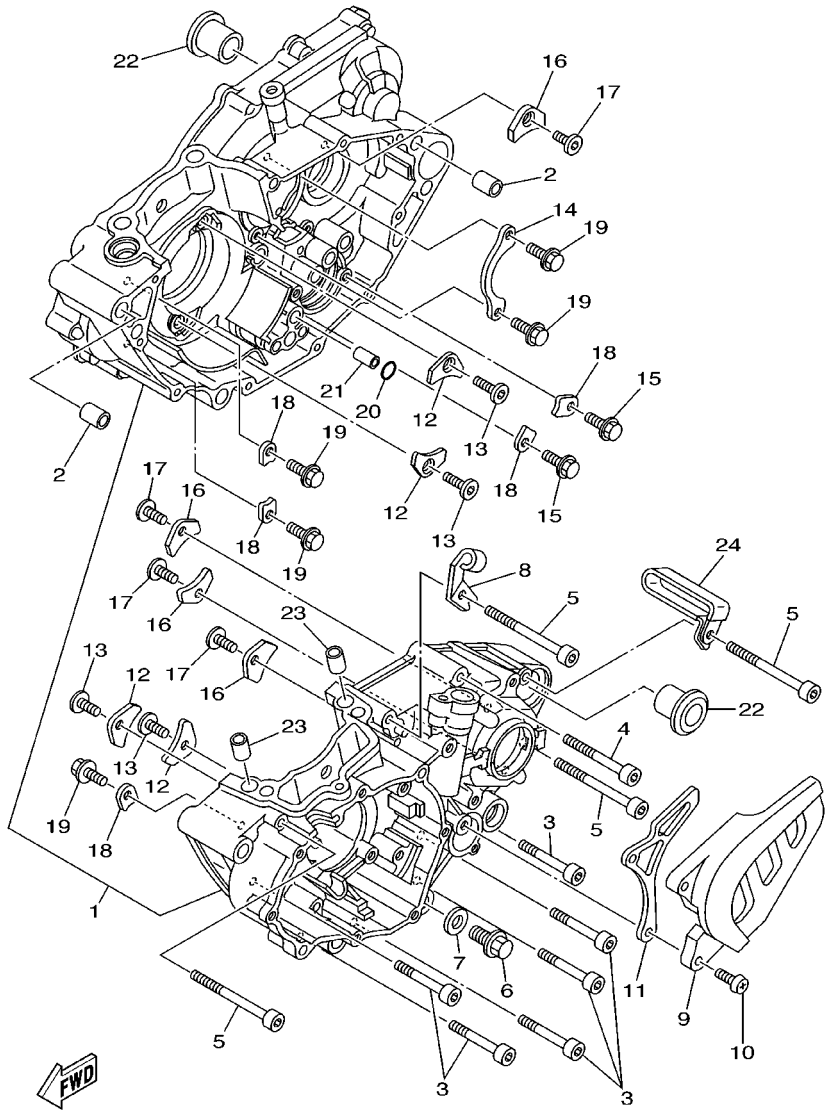

FIG. 12 CRANKCASE

REF. NO.	PART NO.	DESCRIPTION	5NL1	5NL2	5NL3	5NL4		REMARKS
1	5NL–15150–00	CRANKCASE ASSY	1	1	1	1		
2	93612–16254	PIN, DOWEL	2	2	2	2		
3	91317–06045	BOLT	6	6	6	6		
4	91317–06055	BOLT	1	1	1	1		
5	91317–06070	BOLT	4	4	4	4		
6	95027–10016	BOLT, FLANGE	1	1	1	1		
7	90430–10188	GASKET	1	1	1	1		
8	5NL–15441–01	HOLDER, CLUTCH CABLE	1	1	1	1		
9	5BE–15421–00	COVER, CRANKCASE 2	1	1	1	1		
10	98507–06025	SCREW, PAN HEAD	2	2	2	2		
11	5NL–17466–00	GUIDE, CHAIN	1	1	1	1		
12	5BE–15383–01	PLATE, BEARING COVER	4	4	4	4		
13	90149–06126	SCREW	4	4	4	4		
14	5NL–15388–00	PLATE, BEARING COVER	1	1	1	1		
15	90105–06553	BOLT, WASHER BASED	2	2	2	2		
16	4JT–15381–01	PLATE, BEARING COVER	4	4	4	4		
17	90149–06326	SCREW	4	4	4	4		
18	5DH–18562–00	PLATE, STOPPER 2	5	5	5	5		
19	90105–06553	BOLT, WASHER BASED	5	5	5	5		
20	93210–10197	O–RING	1	1	1	1		
21	99530–10114	PIN, DOWEL	1	1	1	1		
22	90387–1712Y	COLLAR	2	2	2	2		
23	99530–10116	PIN, DOWEL	2	2	2	2		
24	90465–10013	CLAMP	1	1	1	1		

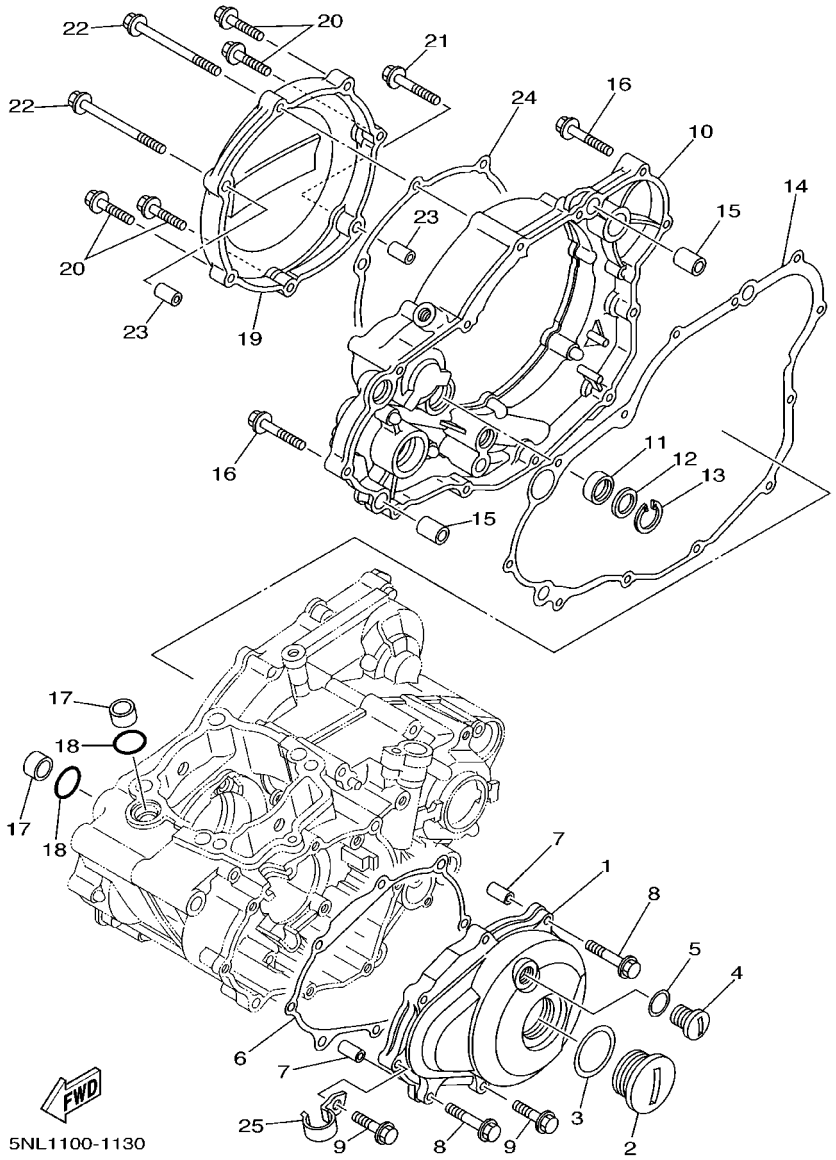

FIG. 13 CRANKCASE COVER 1

REF. NO.	PART NO.	DESCRIPTION	5NL1	5NL2	5NL3	5NL4		REMARKS
1	5NL–15411–00	COVER, CRANKCASE 1	1	1	1	1		
2	90340–32123	PLUG, STRAIGHT SCREW	1	1	1	1		
3	93210–32172	O–RING	1	1	1	1		
4	90340–14128	PLUG, STRAIGHT SCREW	1	1	1	1		
5	93210–14369	O–RING	1	1	1	1		
6	5NL–15451–00	GASKET, CRANKCASE COVER 1	1	1	1	1		
7	99530–08016	PIN, DOWEL	2	2	2	2		
8	95027–06035	BOLT, FLANGE	2	2	2	2		
9	95027–06025	BOLT, FLANGE	6	6	6	6		
10	5NL–15431–00	COVER, CRANKCASE 3	1	1	1	1		
11	93101–14164	OIL SEAL	1	1	1	1		
12	90201–15701	WASHER, PLATE (1.0T)	1	1	1	1		
13	99009–22500	CIRCLIP	1	1	1	1		
14	5NL–15462–00	GASKET, CRANKCASE COVER 3	1	1	1	1		
15	91812–16001	PIN, DOWEL	2	2	2	2		
16	95027–06035	BOLT, FLANGE	8	8	8	8		
17	5NL–12564–00	PIPE, WATER	2	2	2	2		
18	93210–16716	O–RING	2	2	2	2		
19	5NL–15415–00	COVER 1	1	1	1	1		
20	95027–06025	BOLT, FLANGE	4	4	4	4		
21	95027–06035	BOLT, FLANGE	1	1	1	1		
22	90105–065A1	BOLT, WASHER BASED	2	2	2	2		
23	99530–08016	PIN, DOWEL	2	2	2	2		
24	5NL–15453–00	GASKET 1	1	1	1	1		
25	90465–08029	CLAMP	1	1	1	1		

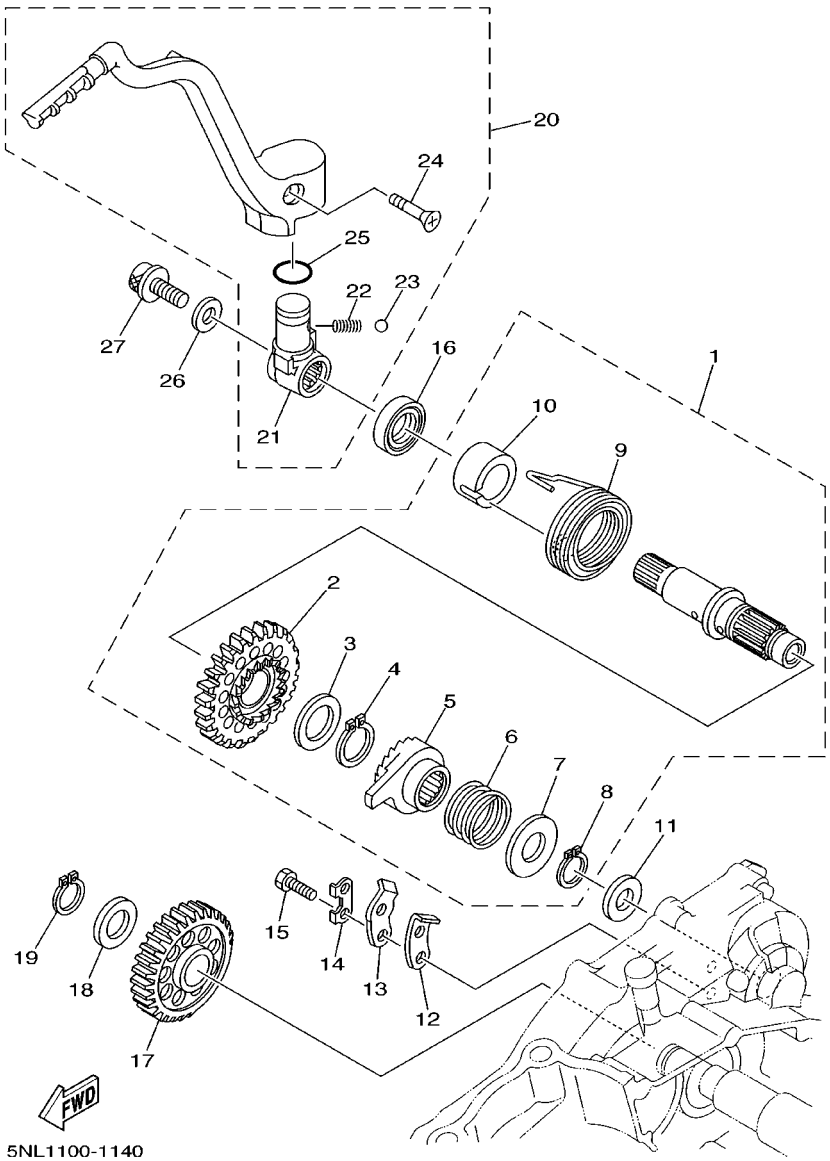

FIG. 14 STARTER

REF. NO.	PART NO.	DESCRIPTION	5NL1	5NL2	5NL3	5NL4		REMARKS
1	5NL–15601–00	KICK SHAFT ASSY	1	1	1	1		
2	5NL–15641–00	.GEAR, KICK	1	1	1	1		
3	90201–20685	.WASHER, PLATE (0.5T)	1	1	1	1		
4	93410–20038	.CIRCLIP	1	1	1	1		
5	4GY–15671–00	.WHEEL, RATCHET	1	1	1	1		
6	90501–16107	.SPRING, COMPRESSION	1	1	1	1		
7	90201–167P7	.WASHER, PLATE	1	1	1	1		
8	99009–16400	.CIRCLIP	1	1	1	1		
9	90508–30743	.SPRING, TORSION	1	1	1	1		
10	5NL–15664–00	.GUIDE, SPRING	1	1	1	1		
11	90201–162H4	WASHER, PLATE	1	1	1	1		
12	2NX–15668–00	STOPPER	1	1	1	1		
13	214–15674–00	GUIDE, RATCHET WHEEL	1	1	1	1		
14	214–15686–00	WASHER, LOCK	1	1	1	1		
15	90101–06001	BOLT	2	2	2	2		
16	93102–18278	OIL SEAL	1	1	1	1		
17	5NL–15651–00	GEAR, KICK IDLE	1	1	1	1		
18	90201–177G4	WASHER, PLATE	1	1	1	1		
19	99009–17400	CIRCLIP	1	1	1	1		
20	5NL–15620–00	KICK CRANK ASSY	1	1	1	1		
21	5NL–15621–00	.BOSS, KICK CRANK	1	1	1	1		
22	90501–12081	.SPRING, COMPRESSION	1	1	1	1		
23	93507–32009	.BALL	1	1	1	1		
24	90152–06010	.SCREW, COUNTERSUNK	1	1	1	1		
25	93210–17570	.O–RING	1	1	1	1		
26	90201–08326	WASHER, PLATE	1	1	1	1		
27	90109–082G0	BOLT	1	1	1	1		

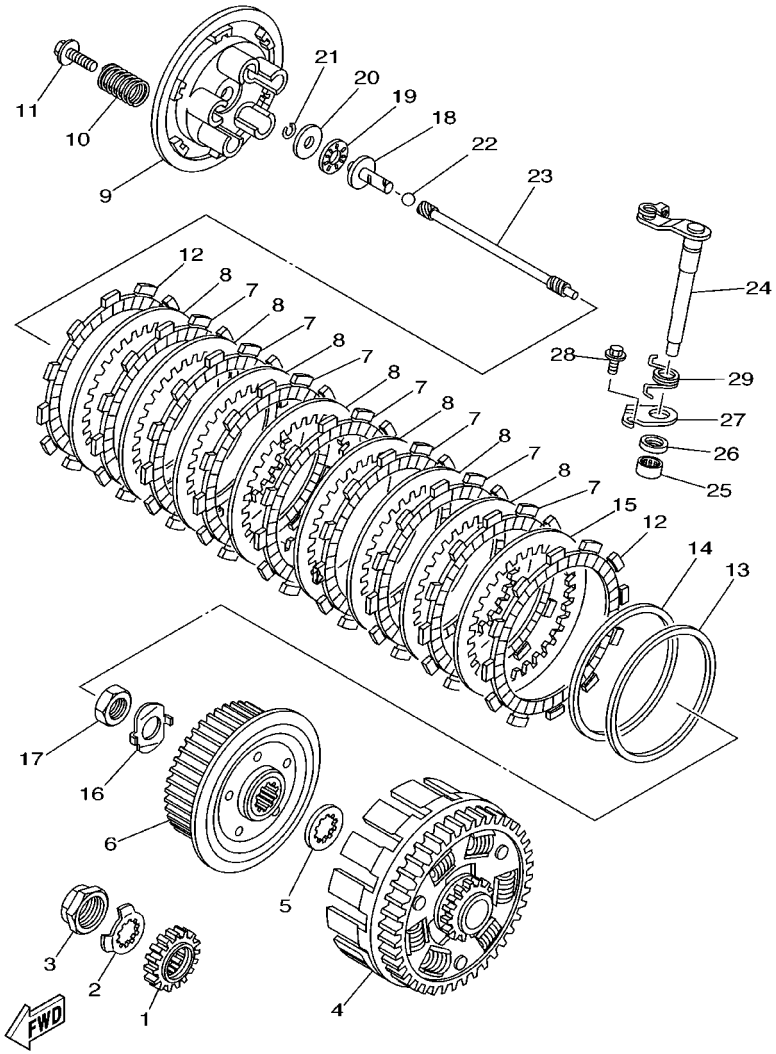

5NL1100-1150

FIG. 15 CLUTCH

REF. NO.	PART NO.	DESCRIPTION	5NL1	5NL2	5NL3	5NL4		REMARKS
1	5NL–16111–00	GEAR, PRIMARY DRIVE	1	1	1	1		
2	90215–20003	WASHER, LOCK	1	1	1	1		
3	90179–18001	NUT	1	1	1	1		
4	5NL–16150–00	PRIMARY DRIVEN GEAR COMP.	1	1	1	1		
5	5NL–16154–00	PLATE, THRUST 1	1	1	1	1		
6	5NL–16371–00	BOSS, CLUTCH	1	1	1	1		
7	5DH–16321–00	PLATE, FRICTION	7	7	7	7		
8	5NL–16325–00	PLATE, CLUTCH 2	7	7	7	7		
9	5HD–16351–00	PLATE, PRESSURE 1	1	1	1	1		
10	90501–224J9	SPRING, COMPRESSION	5	5	5	5		
11	90159–06092	SCREW, WITH WASHER	5	5	5	5		
12	3XJ–16321–00	PLATE, FRICTION	2	2	2	2		
13	3XV–16384–10	PLATE, SEAT	1	1	1	1		
14	5NL–16383–00	SPRING, CLUTCH BOSS	1	1	1	1		
15	5NL–16325–10	PLATE, CLUTCH 2	1	1	1	1		
16	90215–16289	WASHER, LOCK	1	1	1	1		
17	90170–16326	NUT	1	1	1	1		
18	5NL–16356–00	ROD, PUSH 1	1	1	1	1		
19	93340–21008	BEARING	1	1	1	1		
20	90201–080H1	WASHER, PLATE	1	1	1	1		
21	93440–07182	CIRCLIP	1	1	1	1		
22	93511–32027	BALL	1	1	1	1		
23	5NL–16357–00	ROD, PUSH 2	1	1	1	1		
24	5JG–16381–00	PUSH LEVER COMP.	1	1	1	1		
25	93315–11206	BEARING	1	1	1	1		
26	93102–12224	OIL SEAL	1	1	1	1		
27	4JT–16384–00	PLATE, SEAT	1	1	1	1		

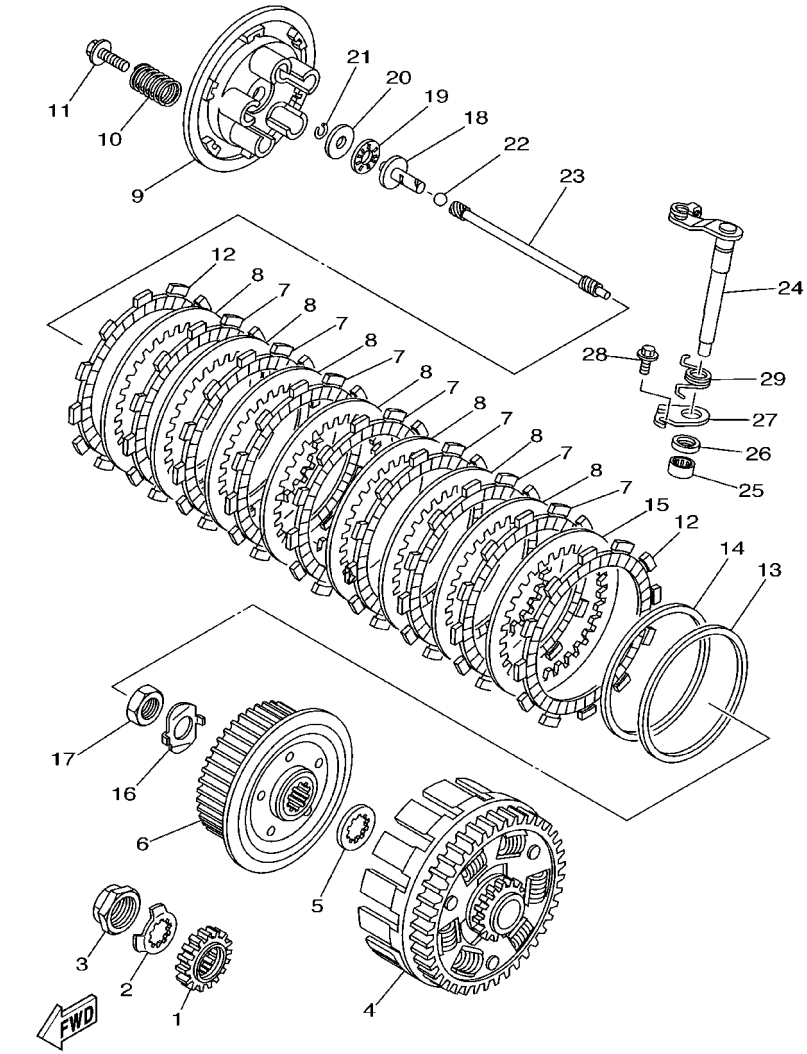

5NL1100-1150

FIG. 15 CLUTCH

REF. NO.	PART NO.	DESCRIPTION	5NL1	5NL2	5NL3	5NL4		REMARKS
28	95027–06010	BOLT, FLANGE	1	1	1	1		
29	90508–142B5	SPRING, TORSION	1	1	1	1		

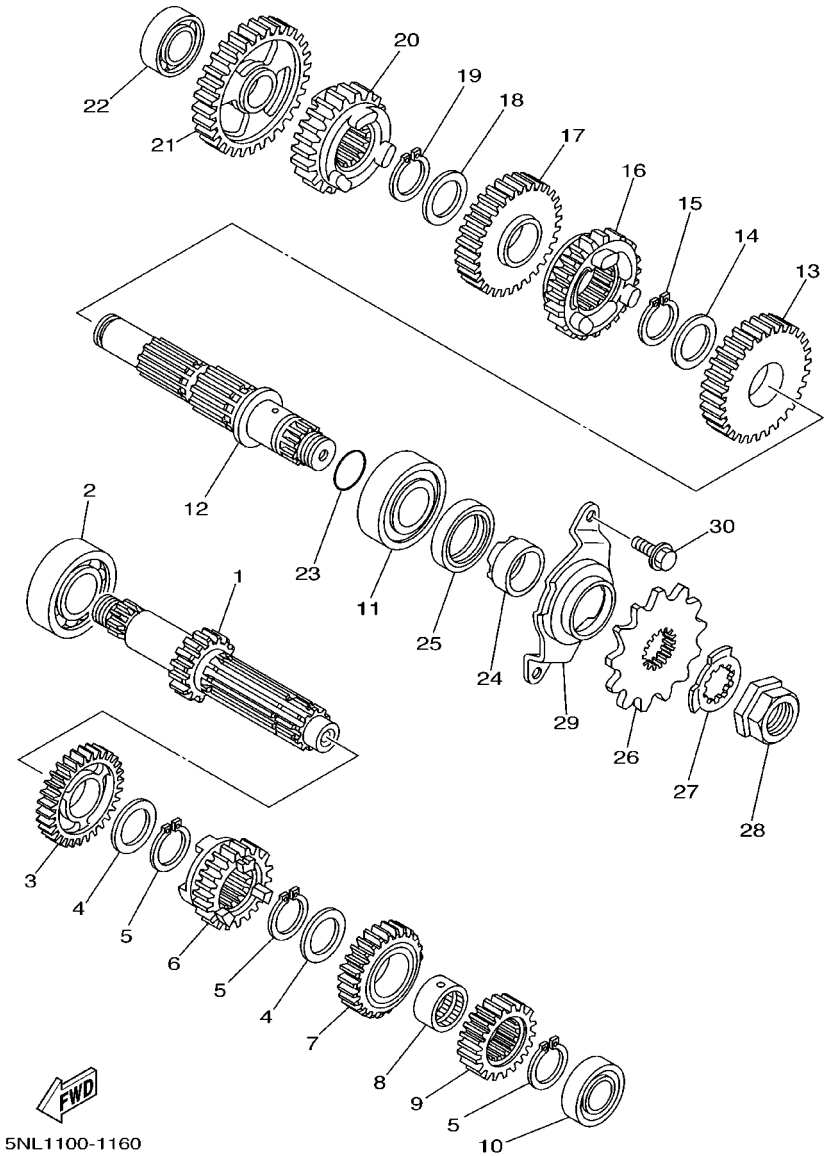

FIG. 16 TRANSMISSION

REF. NO.	PART NO.	DESCRIPTION	5NL1	5NL2	5NL3	5NL4		REMARKS
1	5NL–17411–00	AXLE, MAIN (14T)	1	1	1	1		
2	93306–20447	BEARING	1	1	1	1		
3	5NL–17151–00	GEAR, 5TH PINION (24T)	1	1	1	1		
4	90209–20008	WASHER	2	2	2	2		
5	93410–22039	CIRCLIP	3	3	3	3		
6	5NL–17131–00	GEAR, 3RD PINION (20T)	1	1	1	1		
7	5NL–17141–00	GEAR, 4TH PINION (22T)	1	1	1	1		
8	90387–20006	COLLAR	1	1	1	1		
9	5NL–17121–00	GEAR, 2ND PINION (16T)	1	1	1	1		
10	93306–00320	BEARING	1	1	1	1		
11	93306–27208	BEARING	1	1	1	1		
12	5NL–17421–00	AXLE, DRIVE	1	1	1	1		
13	5NL–17221–00	GEAR, 2ND WHEEL (28T)	1	1	1	1		
14	90209–23012	WASHER	1	1	1	1		
15	93410–26067	CIRCLIP	1	1	1	1		
16	5NL–17241–00	GEAR, 4TH WHEEL (27T)	1	1	1	1		
17	5NL–17231–00	GEAR, 3RD WHEEL (29T)	1	1	1	1		
18	90209–20008	WASHER	1	1	1	1		
19	93410–22039	CIRCLIP	1	1	1	1		
20	5NL–17251–00	GEAR, 5TH WHEEL (25T)	1	1	1	1		
21	5NL–17211–00	GEAR, 1ST WHEEL (30T)	1	1	1	1		
22	93306–00317	BEARING	1	1	1	1		
23	93210–196A4	O–RING	1	1	1	1		
24	90387–22001	COLLAR	1	1	1	1		
25	93102–28008	OIL SEAL	1	1	1	1		
26	9383B–13218	SPROCKET, DRIVE (13T)	1	1	1	1		
27	90215–20003	WASHER, LOCK	1	1	1	1		

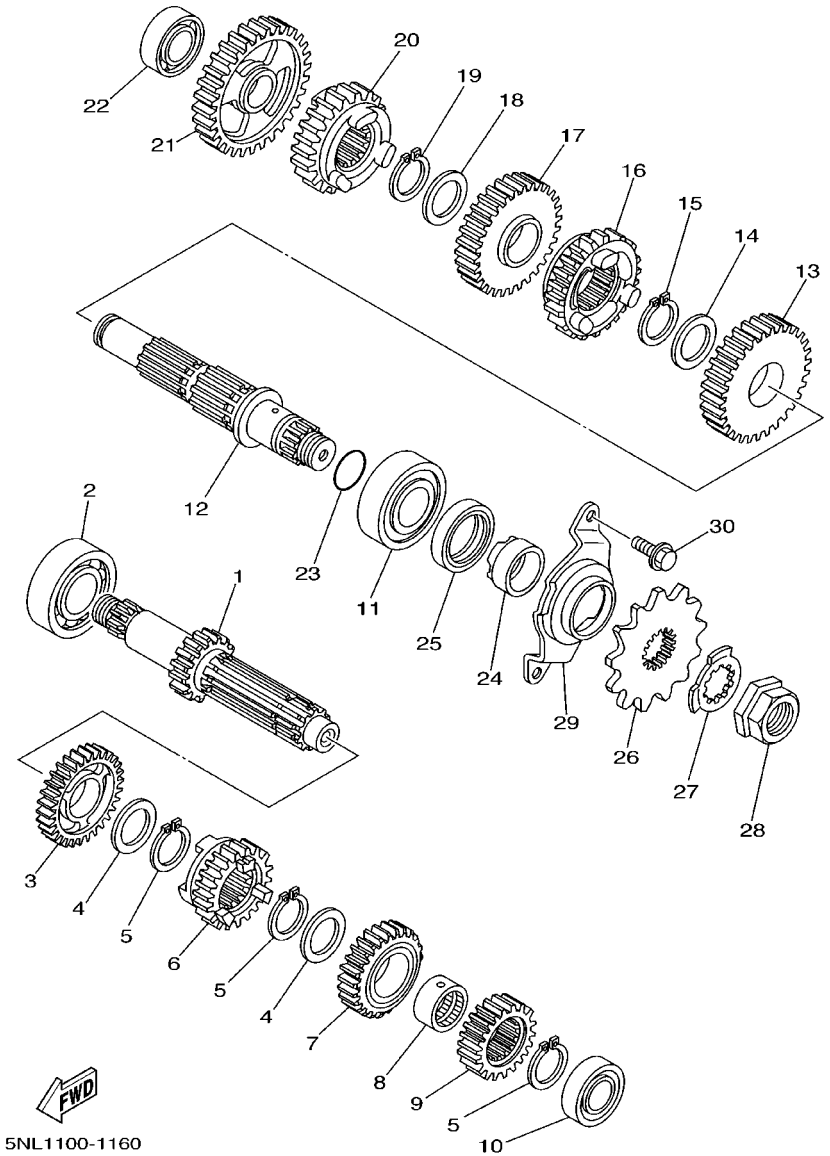

FIG. 16 TRANSMISSION

REF. NO.	PART NO.	DESCRIPTION	5NL1	5NL2	5NL3	5NL4		REMARKS
28	90179–18001	NUT	1	1	1	1		
29	5NL–17471–00	PLATE, COVER	1	1	1	1		
30	90105–06553	BOLT, WASHER BASED	2	2	2	2		

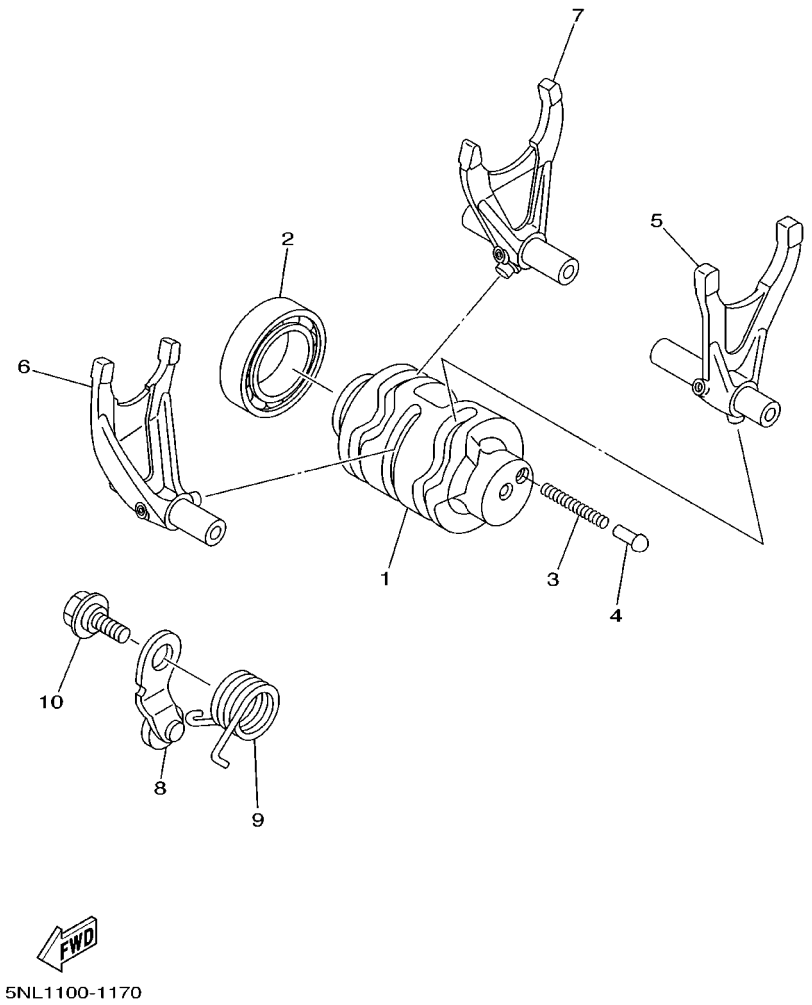

FIG. 17 SHIFT CAM. FORK

REF. NO.	PART NO.	DESCRIPTION	5NL1	5NL2	5NL3	5NL4		REMARKS
1	5NL–18541–00	CAM, SHIFT	1	1	1	1		
2	93306–90501	BEARING	1	1	1	1		
3	90501–06022	SPRING, COMPRESSION	1	1	1	1		
4	4BA–18542–00	POINT, NEUTRAL	1	1	1	1		
5	5NL–18501–00	FORK, SHIFT 1	1	1	1	1		
6	5NL–18502–00	FORK, SHIFT 2	1	1	1	1		
7	5NL–18503–00	FORK, SHIFT 3	1	1	1	1		
8	3XK–18140–00	STOPPER LEVER ASSY	1	1	1	1		
9	90508–26561	SPRING, TORSION	1	1	1	1		
10	90109–063F8	BOLT	1	1	1	1		

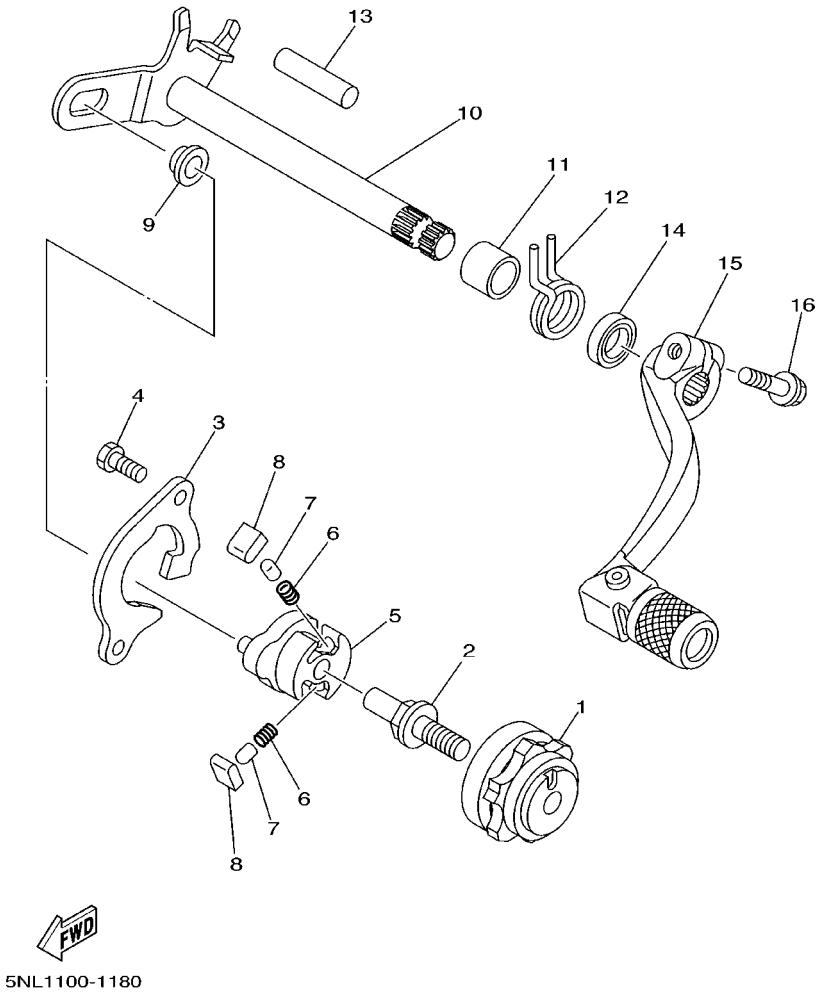

FIG. 18 SHIFT SHAFT

REF. NO.	PART NO.	DESCRIPTION	5NL1	5NL2	5NL3	5NL4		REMARKS
1	4EW–18185–00	SEGMENT	1	1	1	1		
2	3XJ–18173–00	PIN, SHIFT	1	1	1	1		
3	5BE–18172–00	GUIDE, SHIFT	1	1	1	1		
4	90101–06664	BOLT	2	2	2	2		
5	5LP–18122–00	LEVER, SHIFT 2	1	1	1	1		
6	90501–052G5	SPRING, COMPRESSION	2	2	2	2		
7	3XJ–18184–00	PIN, PAWL	2	2	2	2		
8	3XJ–18182–00	PAWL, SHIFTER	2	2	2	2		
9	3XJ–18178–00	ROLLER, SHIFT LEVER	1	1	1	1		
10	5NL–18101–00	SHIFT SHAFT ASSY	1	1	1	1		
11	90387–124F4	COLLAR	1	1	1	1		
12	90508–291A8	SPRING, TORSION	1	1	1	1		
13	93608–33002	PIN, DOWEL	1	1	1	1		
14	93102–12224	OIL SEAL	1	1	1	1		
15	5NL–18110–00	SHIFT PEDAL ASSY	1	1	1	1		
16	95027–06020	BOLT, FLANGE	1	1	1	1		

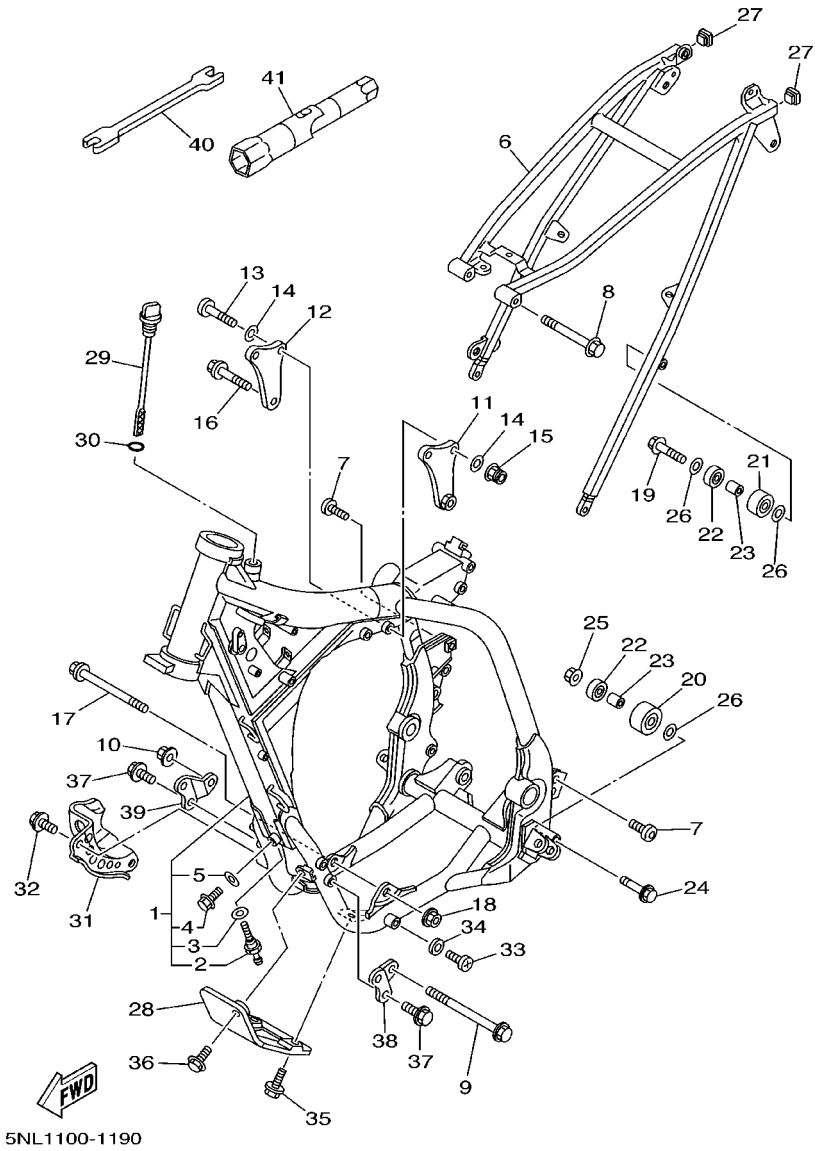

FIG. 19 FRAME

REF. NO.	PART NO.	DESCRIPTION	5NL1	5NL2	5NL3	5NL4		REMARKS
1	5NL–21101–00–P0	FRONT FRAME COMP.	1	1	1	1		DPBMC
2	5BE–21756–00	.NET, FILTER	1	1	1	1		
3	90430–18130	.GASKET	1	1	1	1		
4	95827–08012	.BOLT, FLANGE	1	1	1	1		
5	90430–08119	.GASKET	1	1	1	1		
6	5JG–21190–50–P0	REAR FRAME COMP.	1	1	1	1		DPBMC
7	90110–08096	BOLT, HEXAGON SOCKET HEAD	2	2	2	2		
8	90105–08099	BOLT, WASHER BASED	1	1	1	1		
9	95817–10130	BOLT, FLANGE	1	1	1	1		
10	95607–10200	NUT, SELF–LOCKING	1	1	1	1		
11	5NL–21425–00	BRACKET, REAR UPPER 1	1	1	1	1		
12	5NL–21425–10	BRACKET, REAR UPPER 1	1	1	1	1		
13	92017–08055	BOLT, BUTTON HEAD	2	2	2	2		
14	90201–086P8	WASHER, PLATE	4	4	4	4		
15	90185–08169	NUT, SELF–LOCKING	2	2	2	2		
16	95817–10050	BOLT, FLANGE	1	1	1	1		
17	90105–10733	BOLT, WASHER BASED	1	1	1	1		
18	95607–10200	NUT, SELF–LOCKING	1	1	1	1		
19	95027–08040	BOLT, FLANGE	1	1	1	1		
20	3JD–22178–10	TENSIONER	1	1	1	1		
21	4EW–22178–00	TENSIONER	1	1	1	1		
22	93300–60804	BEARING	2	2	2	2		
23	90387–086N4	COLLAR	2	2	2	2		
24	95027–08065	BOLT, FLANGE	1	1	1	1		
25	95707–08500	NUT, FLANGE	1	1	1	1		
26	90201–086P8	WASHER, PLATE	3	3	3	3		
27	90338–16148	PLUG	2	2	2	2		

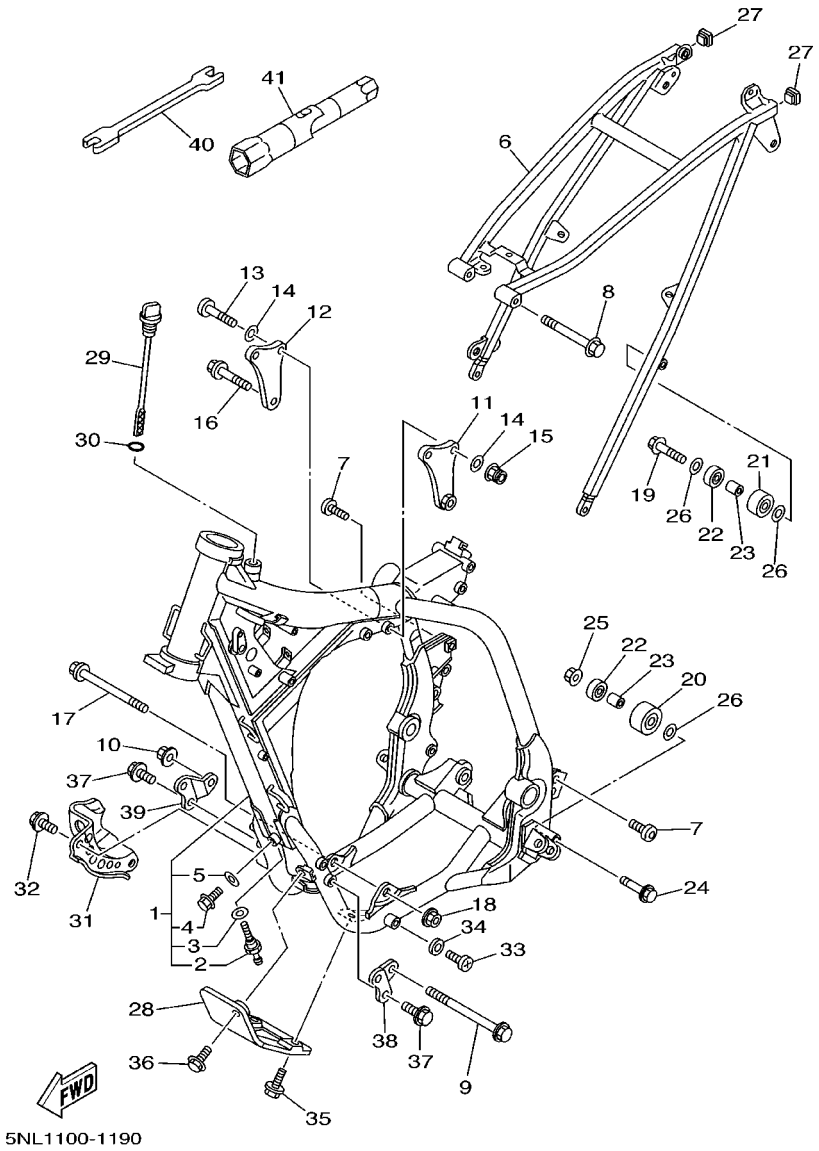

FIG. 19 FRAME

REF. NO.	PART NO.	DESCRIPTION	5NL1	5NL2	5NL3	5NL4		REMARKS
28	5NL–21471–00	PROTECTOR, ENGINE	1	1	1	1		
29	5NL–15362–00	PLUG, OIL LEVEL	1	1	1	1		
30	93210–19123	O–RING	1	1	1	1		
31	5NL–2147A–00	GUARD, ENGINE 1	1	1	1	1		
32	95027–08012	BOLT, FLANGE	2	2	2	2		
33	90157–08028	SCREW, PAN HEAD	1	1	1	1		
34	90202–08204	WASHER, PLATE	1	1	1	1		
35	95027–06012	BOLT, FLANGE	2	2	2	2		
36	90119–06001	BOLT, WITH WASHER	1	1	1	1		
37	95817–08016	BOLT, FLANGE	4	4	4	4		
38	5NL–21417–00	BRACKET, FRONT LOWER 1	1	1	1	1		
39	5NL–21417–10	BRACKET, FRONT LOWER 1	1	1	1	1		
40	5ET–28166–00	WRENCH, HEXAGON	1	1	1	1		
41	5BE–2814F–00	BOX, SPARK PLUG	1	1	1	1		

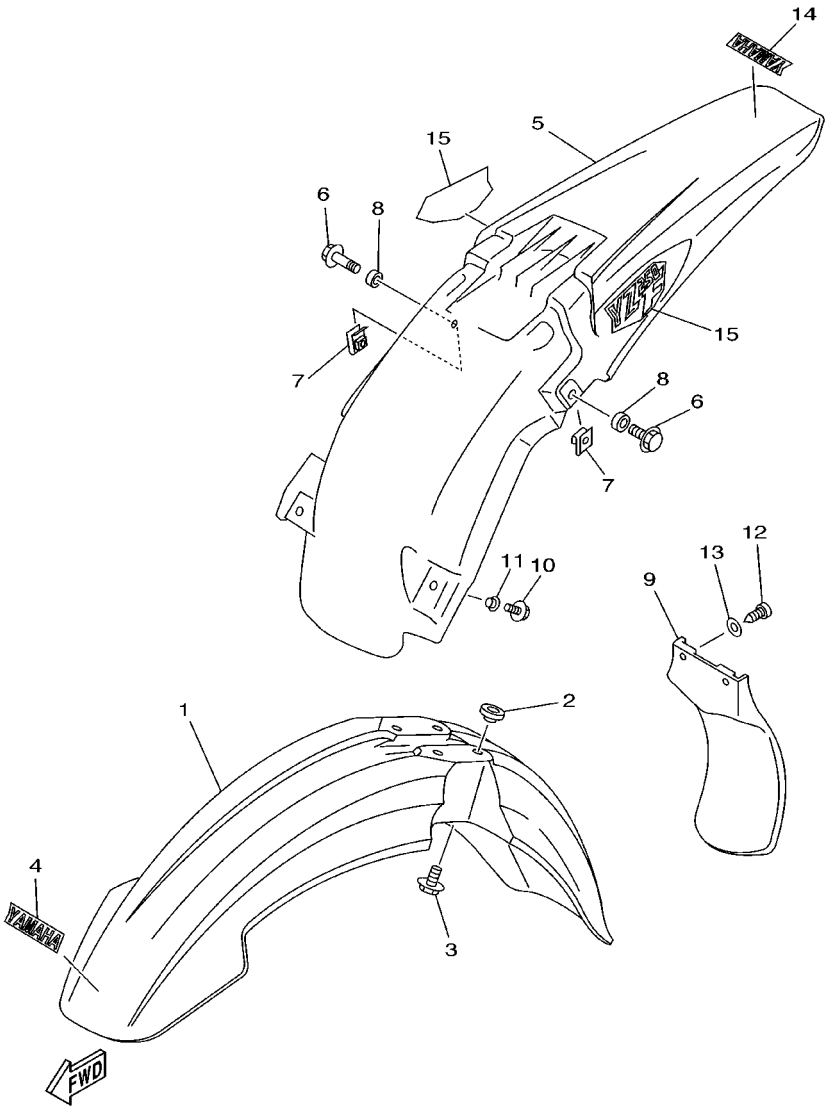

5NL1100-1200

FIG. 20 FENDER

REF. NO.	PART NO.	DESCRIPTION	5NL1	5NL2	5NL3	5NL4		REMARKS
1	5HD–21511–00	FENDER, FRONT	1	1	1	1		
2	3JD–21748–00	COLLAR	4	4	4	4		
3	90119–06096	BOLT, WITH WASHER	4	4	4	4		
4	4ES–2153E–01	EMBLEM, YAMAHA	1	1	1	1		
5	5BE–21611–10	FENDER, REAR	1	1	1	1		
6	90105–06553	BOLT, WASHER BASED	2	2	2	2		
7	90183–06023	NUT, SPRING	2	2	2	2		
8	90387–0701A	COLLAR	2	2	2	2		
9	5BE–21642–00	GUARD, FLAP	1	1	1	1		
10	90105–06690	BOLT, WASHER BASED	2	2	2	2		
11	90387–06009	COLLAR	2	2	2	2		
12	97707–60016	SCREW, TAPPING	2	2	2	2		
13	90201–06557	WASHER, PLATE	2	2	2	2		
14	4ES–2153E–01	EMBLEM, YAMAHA	1	1	1	1		EXCEPT FOR CAN
15	5NL–2163G–00	EMBLEM 1	2	2	2	2		

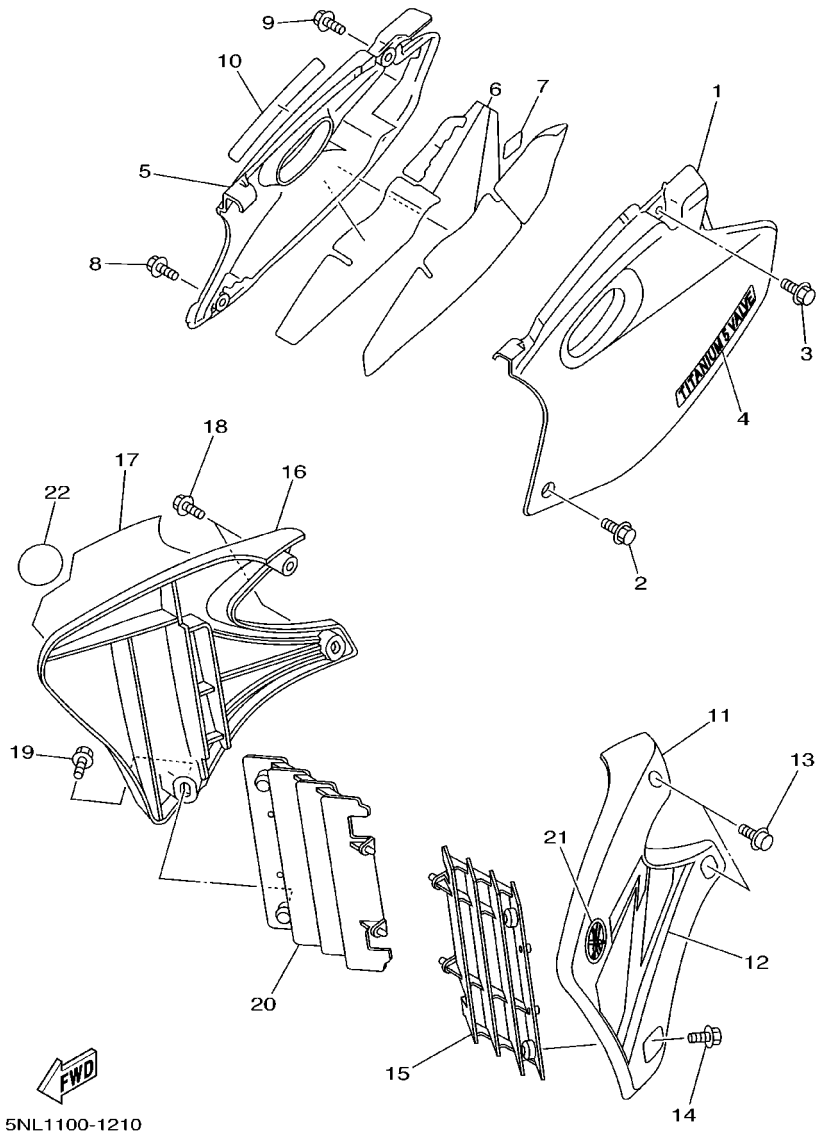

FIG. 21 SIDE COVER

REF. NO.	PART NO.	DESCRIPTION	5NL1	5NL2	5NL3	5NL4		REMARKS
1	5BE–21711–00	COVER, SIDE 1	1	1	1	1		
2	95827–06016	BOLT, FLANGE	1	1	1	1		
3	90119–08238	BOLT, WITH WASHER	1	1	1	1		
4	5JG–21781–50	EMBLEM 1	1	1	1	1		
5	5BE–21721–00	COVER, SIDE 2	1	1	1	1		
6	5BE–2174A–00	INSULATOR, SIDE COVER	1	1	1	1		
7	3FY–21575–01	SEAL 1	1	1	1	1		
8	95827–06016	BOLT, FLANGE	1	1	1	1		
9	90119–08238	BOLT, WITH WASHER	1	1	1	1		
10	5JG–21781–50	EMBLEM 1	1	1	1	1		
11	5NL–21731–00	COVER, SIDE 3	1	1	1	1		
12	5JG–2173E–50	GRAPHIC 1	1	1	1	1		
13	90159–06182	SCREW, WITH WASHER	2	2	2	2		
14	90159–06078	SCREW, WITH WASHER	1	1	1	1		
15	5NL–2172A–00	PANEL 1	1	1	1	1		
16	5NL–21741–00	COVER, SIDE 4	1	1	1	1		
17	5JG–2173F–50	GRAPHIC 2	1	1	1	1		
18	90159–06182	SCREW, WITH WASHER	2	2	2	2		
19	90159–06078	SCREW, WITH WASHER	1	1	1	1		
20	5NL–2172A–00	PANEL 1	1	1	1	1		
21	5MV–2175C–00	TUNING FORK MARK	1	1	1	1		
22	5MV–2175C–00	TUNING FORK MARK	1	1	1	1		

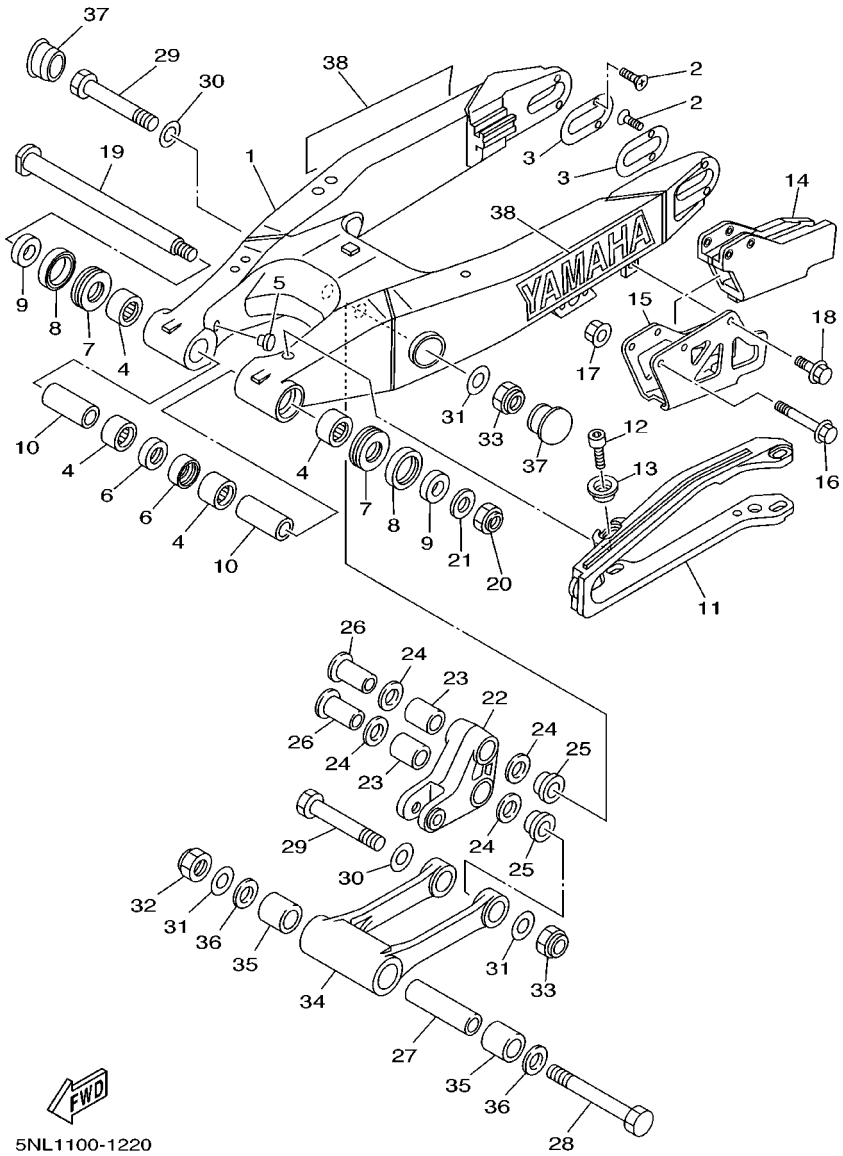

FIG. 22 REAR ARM

REF. NO.	PART NO.	DESCRIPTION	5NL1	5NL2	5NL3	5NL4		REMARKS
1	5MV–22110–00	REAR ARM COMP.	1	1	1	1		
2	90151–04048	SCREW, COUNTERSUNK	4	4	4	4		
3	5ET–22355–00	PATCH	2	2	2	2		
4	93317–22262	BEARING	4	4	4	4		
5	90338–16148	PLUG	2	2	2	2		
6	93106–22019	OIL SEAL (DC 22–28–8)	2	2	2	2		
7	93342–22217	BEARING	2	2	2	2		
8	93109–28043	OIL SEAL	2	2	2	2		
9	90387–1714R	COLLAR	2	2	2	2		
10	90387–1714S	COLLAR	2	2	2	2		
11	5MV–22151–00	SEAL, GUARD	1	1	1	1		
12	91317–05008	BOLT	4	4	4	4		
13	5JG–22156–00	WASHER, PLATE	4	4	4	4		
14	4XM–22199–00	SUPPORT, CHAIN	1	1	1	1		
15	4XM–22128–00	COVER, THRUST 1	1	1	1	1		
16	95027–06050	BOLT, FLANGE	2	2	2	2		
17	90179–06568	NUT	2	2	2	2		
18	95027–06010	BOLT, FLANGE	1	1	1	1		
19	5DH–22141–00	SHAFT, PIVOT	1	1	1	1		
20	90185–16127	NUT, SELF–LOCKING	1	1	1	1		
21	90201–164H4	WASHER, PLATE	1	1	1	1		
22	5ET–2217A–00	ARM, RELAY	1	1	1	1		
23	93315–32056	BEARING	2	2	2	2		
24	93109–20076	OIL SEAL	4	4	4	4		
25	90387–16005	COLLAR	2	2	2	2		
26	90387–16007	COLLAR	2	2	2	2		
27	90387–167Y9	COLLAR	1	1	1	1		

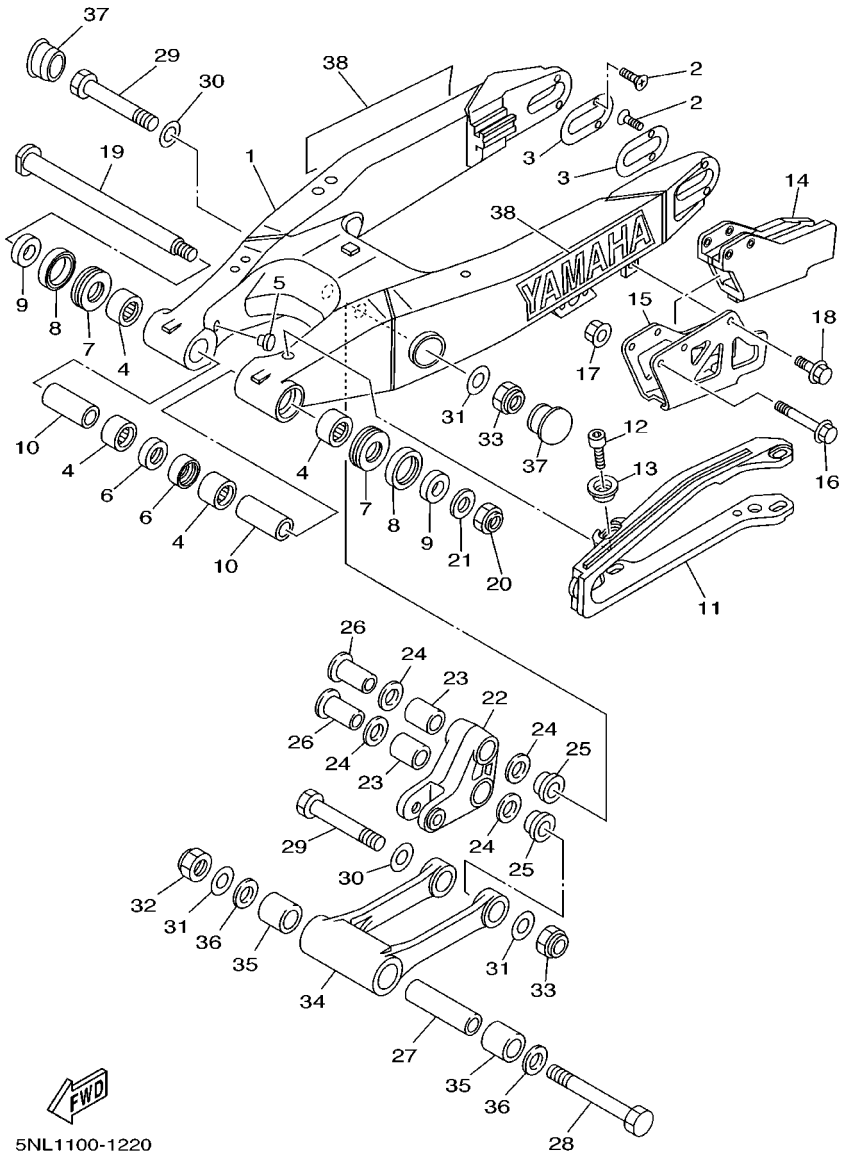

FIG. 22 REAR ARM

REF. NO.	PART NO.	DESCRIPTION	5NL1	5NL2	5NL3	5NL4		REMARKS
28	90109–147F2	BOLT	1	1	1	1		
29	90109–142F4	BOLT	2	2	2	2		
30	90201–164H4	WASHER, PLATE	2	2	2	2		
31	90201–14740	WASHER, PLATE	3	3	3	3		
32	90185–14112	NUT, SELF–LOCKING	1	1	1	1		
33	95617–14100	NUT, U	2	2	2	2		
34	5DH–2217F–01	ROD, CONNECTING 1	1	1	1	1		
35	93315–32056	BEARING	2	2	2	2		
36	93109–20076	OIL SEAL	2	2	2	2		
37	5HD–2135F–00	COVER	2	2	2	2		
38	99244–00200	EMBLEM, YAMAHA	2	2	2	2		

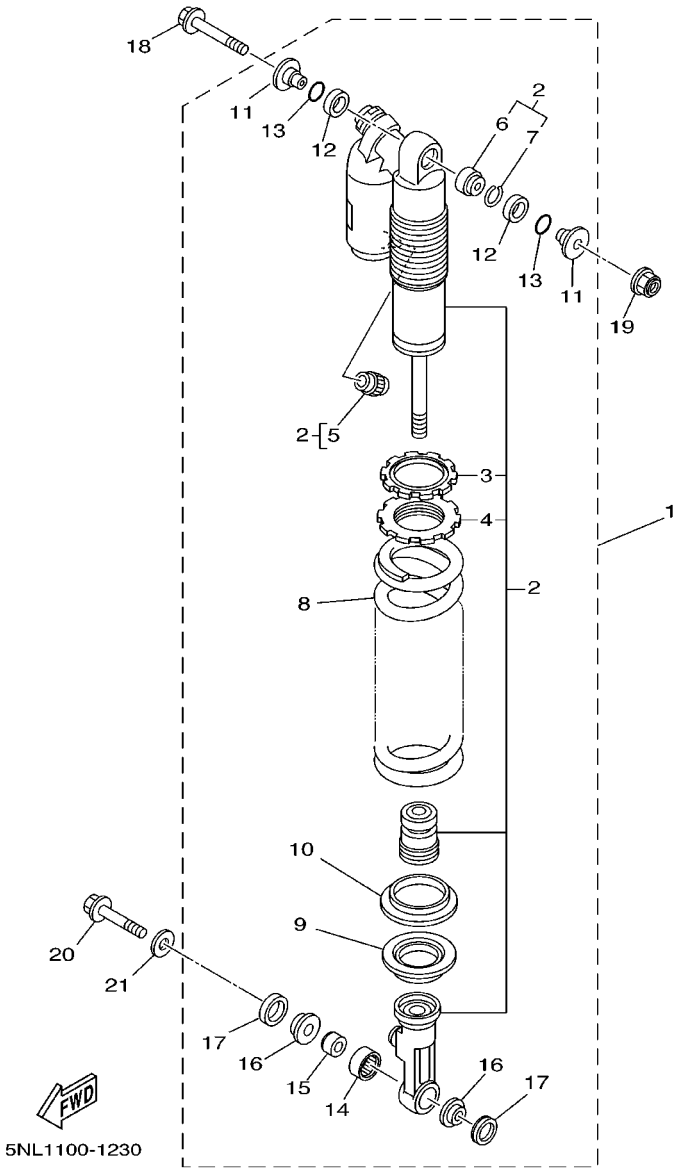

FIG. 23 REAR SUSPENSION

REF. NO.	PART NO.	DESCRIPTION	5NL1	5NL2	5NL3	5NL4		REMARKS
1	5NL–22210–00	SHOCK ABSORBER ASSY, REAR	1					
	5NL–22210–10	SHOCK ABSORBER ASSY, REAR		1				
	5NL–22210–20	SHOCK ABSORBER ASSY, REAR			1			
	5NL–22210–30	SHOCK ABSORBER ASSY, REAR				1		UR FOR CAN
	5NL–22210–40	SHOCK ABSORBER ASSY, REAR				1		UR
2	5NL–22201–00	.DAMPER SUB ASSY	1					
	5NL–22201–10	.DAMPER SUB ASSY		1				
	5NL–22201–20	.DAMPER SUB ASSY			1			
	5NL–22201–30	.DAMPER SUB ASSY				1		UR FOR CAN
	5NL–22201–40	.DAMPER SUB ASSY				1		UR
3	3SP–22234–00	..GUIDE, SPRING 3	1	1	1	1		
4	3SP–22213–00	..SEAT, SPRING UPPER	1	1	1	1		
5	509–23184–L0	..CAP, AIR VALVE	1	1	1	1		
6	4JX–22226–00	..BUSH, SHOCK ABSORBER LOWER	1	1	1	1		
7	5DH–23183–00	..CIRCLIP	1	1	1	1		
8	5DH–22212–20	.SPRING (K=4.8)	1		1	1		
	5ET–22212–10	.SPRING (K=APPROX.5.0)		1				
9	5DH–22214–00	.GUIDE, SPRING 1	1	1	1	1		
10	5MV–22224–00	.GUIDE, SPRING 2	1	1	1	1		
11	5DH–22253–00	.COLLAR, DISTANCE	2	2	2	2		
12	3JE–22475–00	.SEAL, DUST	2	2	2	2		
13	4EW–22474–00	.SEAL, RING	2	2	2	2		
14	5MV–22176–00	.BEARING	1	1	1	1		
15	5MV–22184–00	.BUSH	1	1	1	1		
16	5MV–22253–00	.COLLAR, DISTANCE	2	2	2	2		
17	5MV–22475–00	.SEAL, DUST	2	2	2	2		
18	90105–10323	BOLT, WASHER BASED	1	1	1	1		

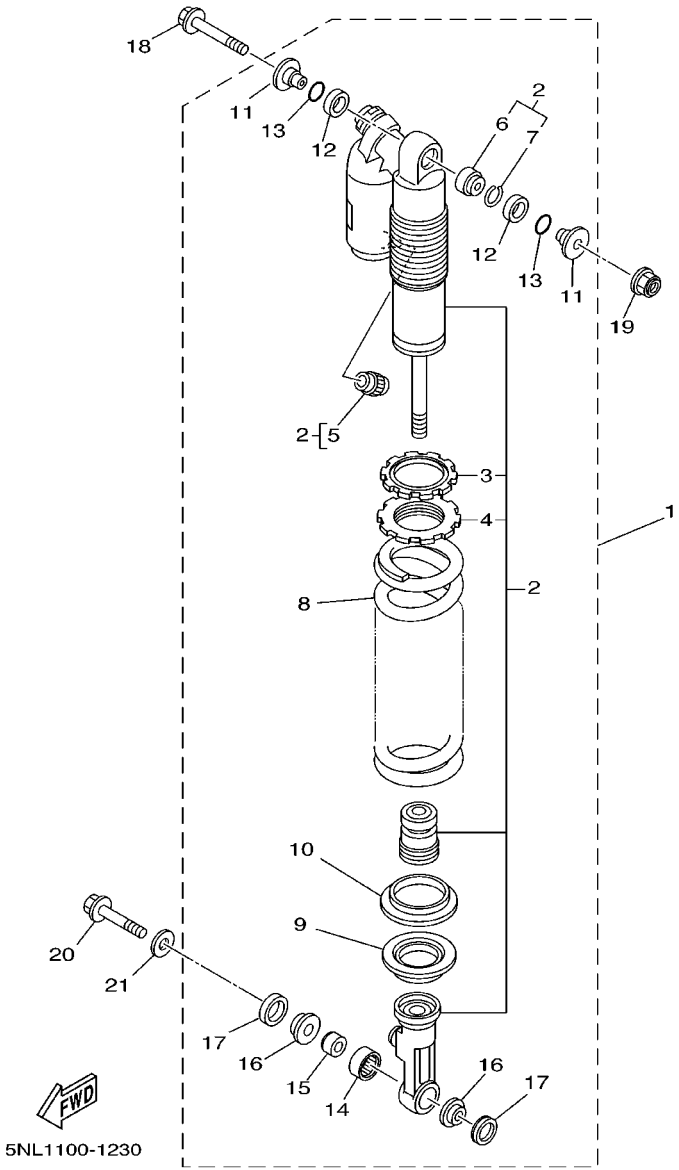

FIG. 23 REAR SUSPENSION

REF. NO.	PART NO.	DESCRIPTION	5NL1	5NL2	5NL3	5NL4		REMARKS
19	95607–10200	NUT, SELF–LOCKING	1	1	1	1		
20	90105–105A2	BOLT, WASHER BASED	1	1	1	1		
21	90201–112U6	WASHER, PLATE	1	1	1	1		

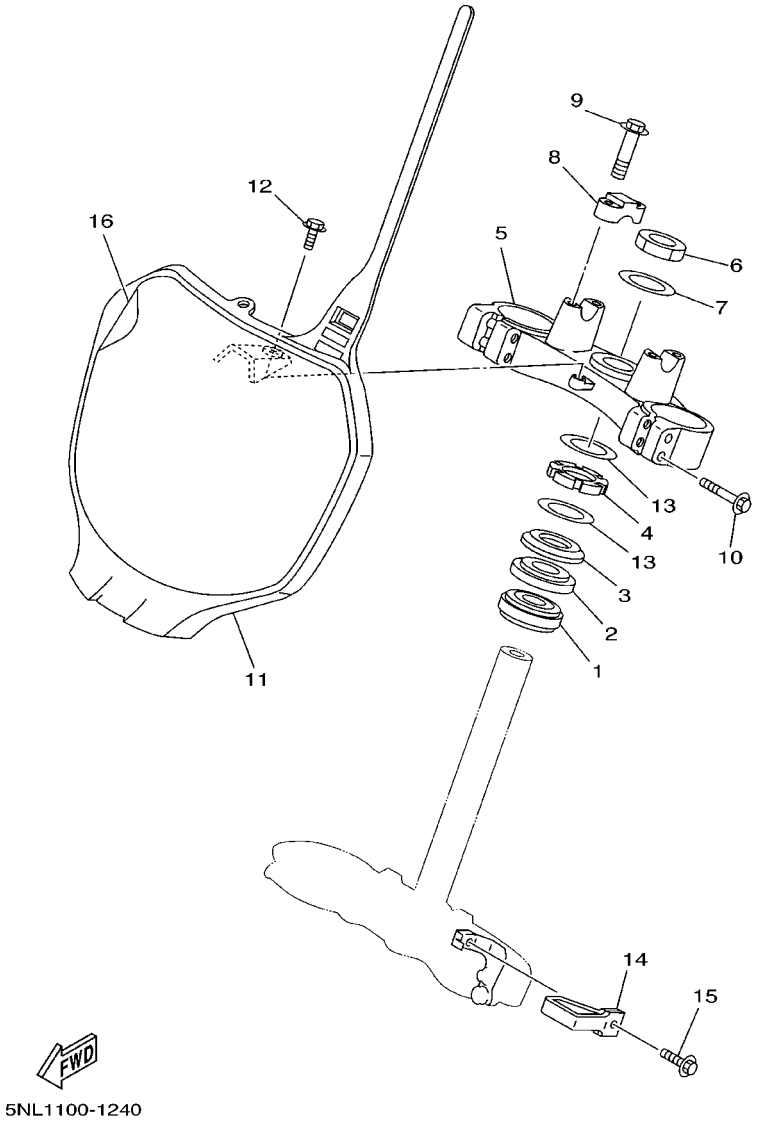

FIG. 24 STEERING

REF. NO.	PART NO.	DESCRIPTION	5NL1	5NL2	5NL3	5NL4		REMARKS
1	93332–00081	BEARING	1	1	1	1		
2	93332–00068	BEARING	1	1	1	1		
3	4EW–23416–00	COVER, BALL RACE 2	1	1	1	1		
4	90179–28650	NUT	1	1	1	1		
5	5NL–23435–00	CROWN, HANDLE	1	1	1	1		
6	90170–24373	NUT	1	1	1	1		
7	90201–247L2	WASHER, PLATE	1	1	1	1		
8	3SP–23441–00	HOLDER, HANDLE UPPER	2	2	2	2		
9	95027–08035	BOLT, FLANGE	4	4	4	4		
10	95027–08040	BOLT, FLANGE	4	4	4	4		
11	5HD–23485–10	PLATE, NUMBER	1	1	1	1		
12	90119–06225	BOLT, WITH WASHER	1	1	1	1		
13	90201–286K9	WASHER, PLATE	2	2	2	2		
14	4DA–23389–00	GUIDE, CABLE	1	1	1	1		
15	90119–05071	BOLT, WITH WASHER	1	1	1	1		
16	5HD–2339E–00	GRAPHIC 1	1	1	1	1		

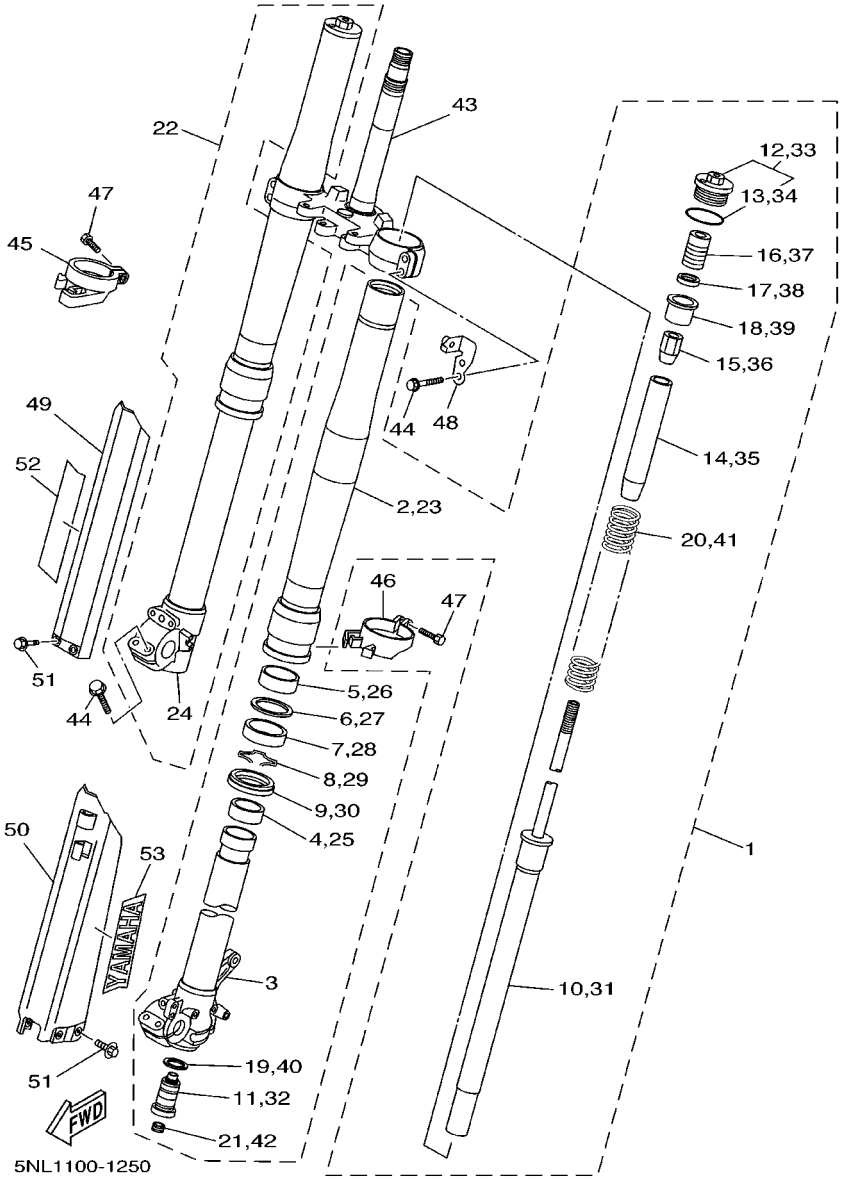

FIG. 25 FRONT FORK

REF. NO.	PART NO.	DESCRIPTION	5NL1	5NL2	5NL3	5NL4		REMARKS
1	5NL–23102–00	FRONT FORK ASSY (L.H)	1		1	1		
	5NL–23102–10	FRONT FORK ASSY (L.H)		1				
2	5HD–23136–L0	.TUBE, OUTER (RIGHT)	1	1	1	1		
3	5DH–23120–L0	.INNER TUBE COMP.2	1	1	1	1		
4	5ET–23171–L0	.PISTON, FRONT FORK	1	1	1	1		
5	5ET–23125–L0	.METAL, SLIDE 1	1	1	1	1		
6	4SS–23146–L0	.WASHER, OIL SEAL	1	1	1	1		
7	5ET–23145–L0	.OIL SEAL	1	1	1	1		
8	4SS–23153–L0	.RING, SNAP	1	1	1	1		
9	5HD–23144–L0	.SEAL, DUST	1	1	1	1		
10	5MV–23170–L0	.CYLINDER COMP., FRONT FORK	1	1	1	1		
11	5NL–2316A–00	.VALVE COMP.	1		1	1		
	5NL–2316A–10	.VALVE COMP.		1				
12	5MV–23111–L0	.BOLT, CAP	1	1	1	1		
13	93210–42263	..O–RING	1	1	1	1		
14	5DH–23142–L0	.SEAT, SPRING UPPER	1	1	1	1		
15	5HD–23393–L0	.NUT, SPECIAL	1	1	1	1		
16	5MV–23195–L0	.RUBBER	1		1	1		
	5DH–23195–L0	.RUBBER		1				
17	5DH–23149–L0	.WASHER, SPRING UPPER	1	1	1	1		
18	5DH–23118–L0	.SPACER	1	1	1	1		
19	4SS–23158–L0	.GASKET	1	1	1	1		
20	5NL–23141–00	.SPRING, FRONT FORK	1		1	1		
	5CU–23141–L0	.SPRING (K=APPROX.0.43)		1				
21	3JD–2312G–L0	.PLUG	1	1	1	1		
22	5NL–23103–00	FRONT FORK ASSY (R.H)	1		1	1		
	5NL–23103–10	FRONT FORK ASSY (R.H)		1				

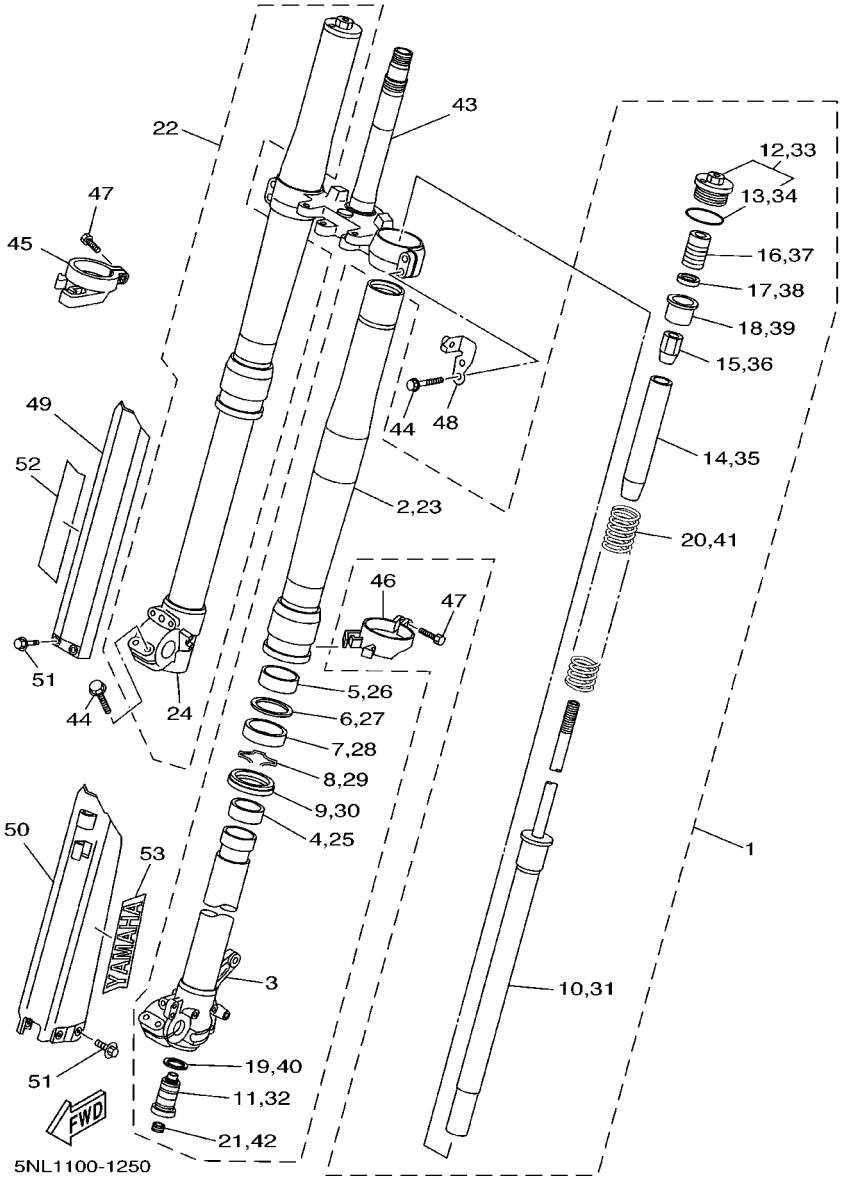

FIG. 25 FRONT FORK

REF. NO.	PART NO.	DESCRIPTION	5NL1	5NL2	5NL3	5NL4		REMARKS
23	5HD–23136–L0	.TUBE, OUTER (RIGHT)	1	1	1	1		
24	5BF–23110–L0	.INNER TUBE COMP.1	1	1	1	1		
25	5ET–23171–L0	.PISTON, FRONT FORK	1	1	1	1		
26	5ET–23125–L0	.METAL, SLIDE 1	1	1	1	1		
27	4SS–23146–L0	.WASHER, OIL SEAL	1	1	1	1		
28	5ET–23145–L0	.OIL SEAL	1	1	1	1		
29	4SS–23153–L0	.RING, SNAP	1	1	1	1		
30	5HD–23144–L0	.SEAL, DUST	1	1	1	1		
31	5MV–23170–L0	.CYLINDER COMP., FRONT FORK	1	1	1	1		
32	5NL–2316A–00	.VALVE COMP.	1		1	1		
	5NL–2316A–10	.VALVE COMP.		1				
33	5MV–23111–L0	.BOLT, CAP	1	1	1	1		
34	93210–42263	..O–RING	1	1	1	1		
35	5DH–23142–L0	.SEAT, SPRING UPPER	1	1	1	1		
36	5HD–23393–L0	.NUT, SPECIAL	1	1	1	1		
37	5MV–23195–L0	.RUBBER	1		1	1		
	5DH–23195–L0	.RUBBER		1				
38	5DH–23149–L0	.WASHER, SPRING UPPER	1	1	1	1		
39	5DH–23118–L0	.SPACER	1	1	1	1		
40	4SS–23158–L0	.GASKET	1	1	1	1		
41	5NL–23141–00	.SPRING, FRONT FORK	1		1	1		
	5CU–23141–L0	.SPRING (K=APPROX.0.43)		1				
42	3JD–2312G–L0	.PLUG	1	1	1	1		
43	5NL–23340–00	UNDER BRACKET COMP.	1	1	1	1		
44	5MV–23346–L0	BOLT 1	8	8	8	8		
45	4SS–2314G–L0	PROTECTER GUIDE COMP., 2	1	1	1	1		
46	5DH–2314F–L0	PROTECTER GUIDE COMP., 1	1	1	1	1		

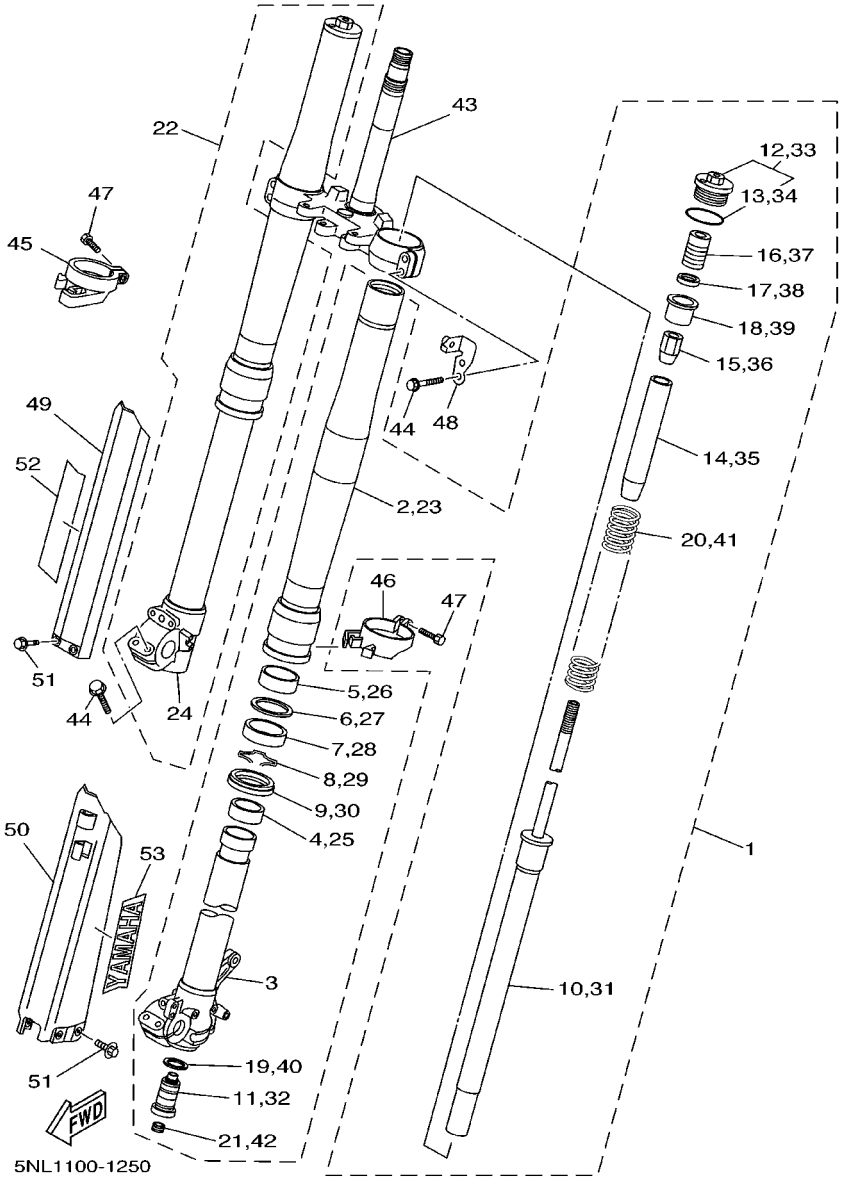

FIG. 25 FRONT FORK

REF. NO.	PART NO.	DESCRIPTION	5NL1	5NL2	5NL3	5NL4		REMARKS
47	4SS–23346–L0	BOLT 1	2	2	2	2		
48	5DH–2314J–00	PROTECTER COMP., 2	1	1	1	1		
49	5DH–2314H–00	PROTECTER COMP., 1	1	1	1	1		
50	3SP–23356–L0	BOLT 2	6	6	6	6		
51	5HC–2331E–00	GUIDE, CABLE	1	1	1	1		
52	4XL–2153A–10	EMBLEM, YAMAHA	1	1	1	1		
53	4XL–2153A–10	EMBLEM, YAMAHA	1	1	1	1		

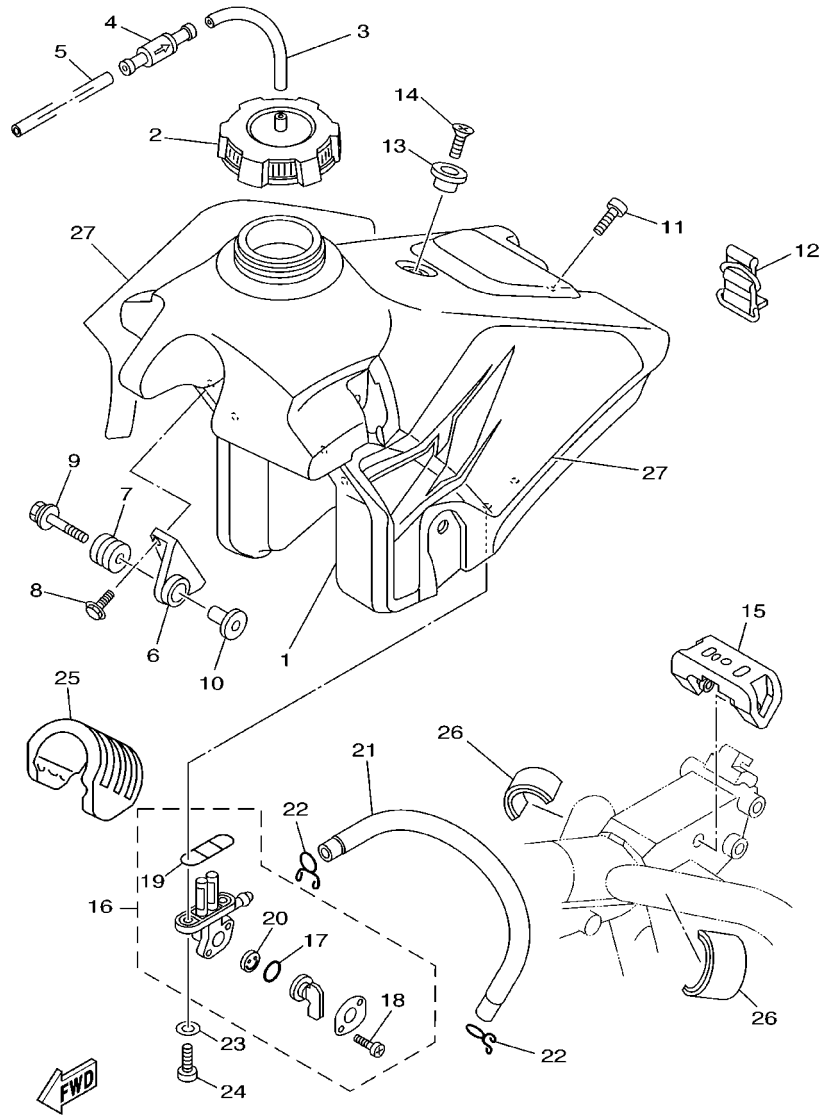

5NL1100-1260

FIG. 26 FUEL TANK

REF. NO.	PART NO.	DESCRIPTION	5NL1	5NL2	5NL3	5NL4		REMARKS
1	5JG–24110–50	FUEL TANK COMP.	1	1	1	1		
2	5MV–24610–00	CAP ASSY	1	1	1	1		
3	90445–09220	HOSE	1	1	1	1		
4	3XJ–24380–00	PIPE JOINT ASSY	1	1	1	1		
5	90445–09104	HOSE	1	1	1	1		
6	24X–24144–00	HOLDER, DAMPER	2	2	2	2		
7	90480–18549	GROMMET	2	2	2	2		
8	95027–06016	BOLT, FLANGE	4	4	4	4		
9	90119–06214	BOLT, WITH WASHER	2	2	2	2		
10	3JD–24186–00	WASHER, SPECIAL	2	2	2	2		
11	98907–06020	SCREW, BIND	1	1	1	1		
12	3SP–24173–00	BAND, TANK FITTING 1	1	1	1	1		
13	4EW–2412F–00	BRACKET, SEAT	1	1	1	1		
14	98707–06025	SCREW, FLAT HEAD	1	1	1	1		
15	4SS–24181–00	DAMPER, LOCATING 1	1	1	1	1		
16	4DP–24500–00	FUEL COCK ASSY 1	1	1	1	1		
17	3AJ–24534–00	.SEAL, COCK	1	1	1	1		
18	97801–03008	.SCREW, PAN HEAD	2	2	2	2		
19	4X8–24512–00	.O–RING	1	1	1	1		
20	3AJ–24523–00	.VALVE PACKING	1	1	1	1		
21	90445–11002	HOSE (L195)	1	1	1	1		
22	90467–10008	CLIP	2	2	2	2		
23	90202–05193	WASHER, PLATE	2	2	2	2		
24	90149–06011	SCREW	2	2	2	2		
25	5BE–24182–00	DAMPER, LOCATING 2	1	1	1	1		
26	3V6–22358–00	SEAL 1	2	2	2	2		
27	5JG–24240–50	GRAPHIC SET	1	1	1	1		

FIG. 27 SEAT

REF. NO.	PART NO.	DESCRIPTION	5NL1	5NL2	5NL3	5NL4		REMARKS
1	5JG–24710–50	SINGLE SEAT ASSY	1	1	1	1		
2	5JG–24731–50	.COVER, SEAT	1	1	1	1		
3	5BE–24728–00	.BRACKET, SEAT	2	2	2	2		
4	97007–06012	.BOLT	4	4	4	4		
5	92907–06100	.WASHER, SPRING	4	4	4	4		

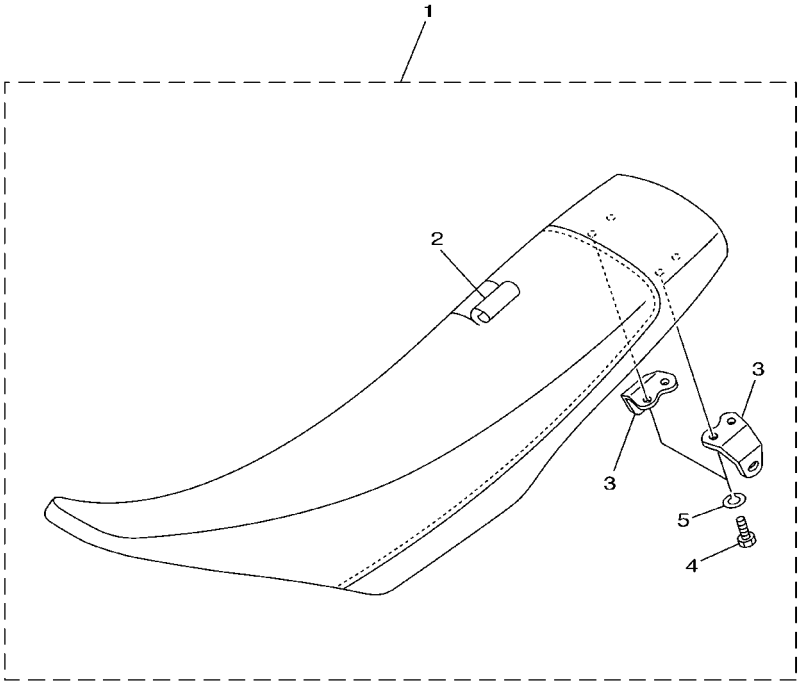

5NL1100-1270

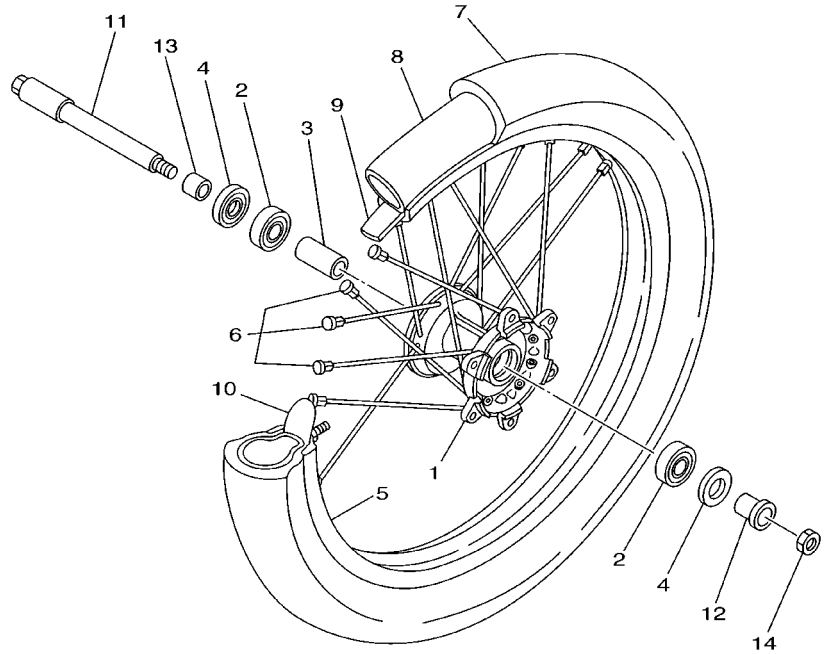

5NL1100-1280

FIG. 28 FRONT WHEEL

REF. NO.	PART NO.	DESCRIPTION	5NL1	5NL2	5NL3	5NL4		REMARKS
1	4SS–25111–01	HUB, FRONT	1	1	1	1		
2	93306–90403	BEARING	2	2	2	2		
3	5DH–25117–00	SPACER, BEARING	1	1	1	1		
4	93102–26468	OIL SEAL	2	2	2	2		
5	94416–21002	RIM (1.60–21)	1	1	1	1		
6	4DA–25104–00	SPOKE SET, FRONT	1	1	1	1		
7	94108–21008	TIRE (80/100–21 51M D739F)	1			1		DUNLOP
	*	TIRE (80/100–21 MT320)		1				LM PIRELLI
	94108–2110Y	TIRE (80/100–21 51M M77)			1			BRIDGESTONE
	94108–2112Y	TIRE (80/100–21 51M D755F)		1		1		DUNLOP
8	94227–21101	TUBE (80/100–21 TR4 BTL)	1	1		1		DUNLOP
	*	TUBE (80/100–21)		1				LM PIRELLI
	94209–21229	TUBE (80/100C–21 TR4)			1			BRIDGESTONE
9	94309–21161	BAND, RIM (70–80/100–21)	1	1		1		DUNLOP
	*	BAND, RIM (80/100–21)		1				LM
	94330–21084	BAND, RIM (3.00–21)			1			BRIDGESTONE
10	2J5–25394–01	SPACER, BEAD	1	1	1	1		
11	5BE–25181–00	AXLE, WHEEL	1	1	1	1		
12	5DH–25183–00	COLLAR, WHEEL	1	1	1	1		
13	5BE–25186–00	COLLAR, WHEEL	1	1	1	1		
14	90179–16672	NUT	1	1	1	1		

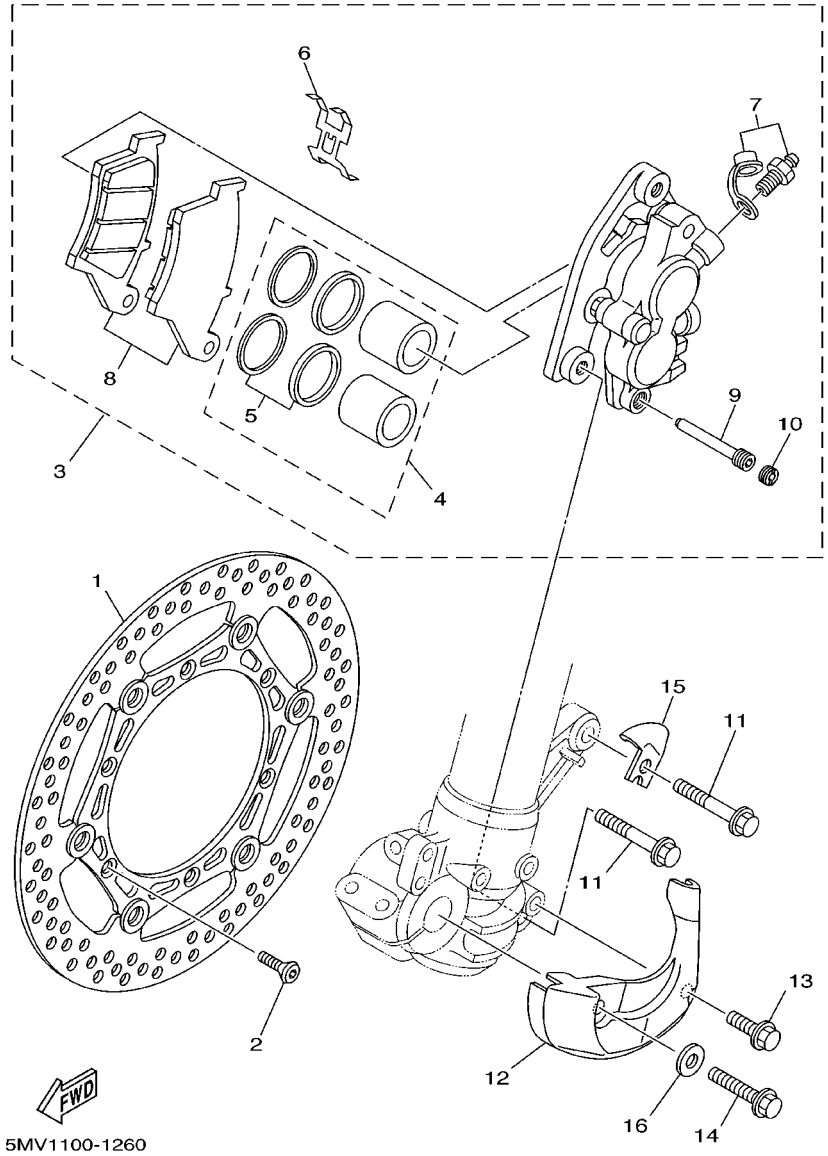

FIG. 29 FRONT BRAKE CALIPER

REF. NO.	PART NO.	DESCRIPTION	5NL1	5NL2	5NL3	5NL4		REMARKS
1	5MV–2581T–00	DISC BRAKE ASSY	1	1	1	1		
2	90149–06327	SCREW	6	6	6	6		
3	5MV–2580T–10	CALIPER ASSY (LEFT)	1	1	1	1		
4	4EW–W0057–00	.PISTON ASSY, CALIPER	1	1	1	1		
5	3JD–W0047–00	..CALIPER SEAL KIT	1	1	1	1		
6	5DH–25919–00	.SUPPORT, PAD	1	1	1	1		
7	1UY–W0048–50	.BLEED SCREW KIT	1	1	1	1		
8	5MV–W0045–00	.BRAKE PAD KIT	1	1	1	1		
9	5DH–25933–00	.PIN, PAD	1	1	1	1		
10	5DH–25916–00	.PLUG	1	1	1	1		
11	90105–08659	BOLT, WASHER BASED	2	2	2	2		
12	5DH–2314E–00	COVER, HOSE	1	1	1	1		
13	95827–06012	BOLT, FLANGE	1	1	1	1		
14	95027–08020	BOLT, FLANGE	1	1	1	1		
15	5DH–25875–00	HOLDER, BRAKE HOSE 1	1	1	1	1		
16	92907–08200	WASHER	1	1	1	1		

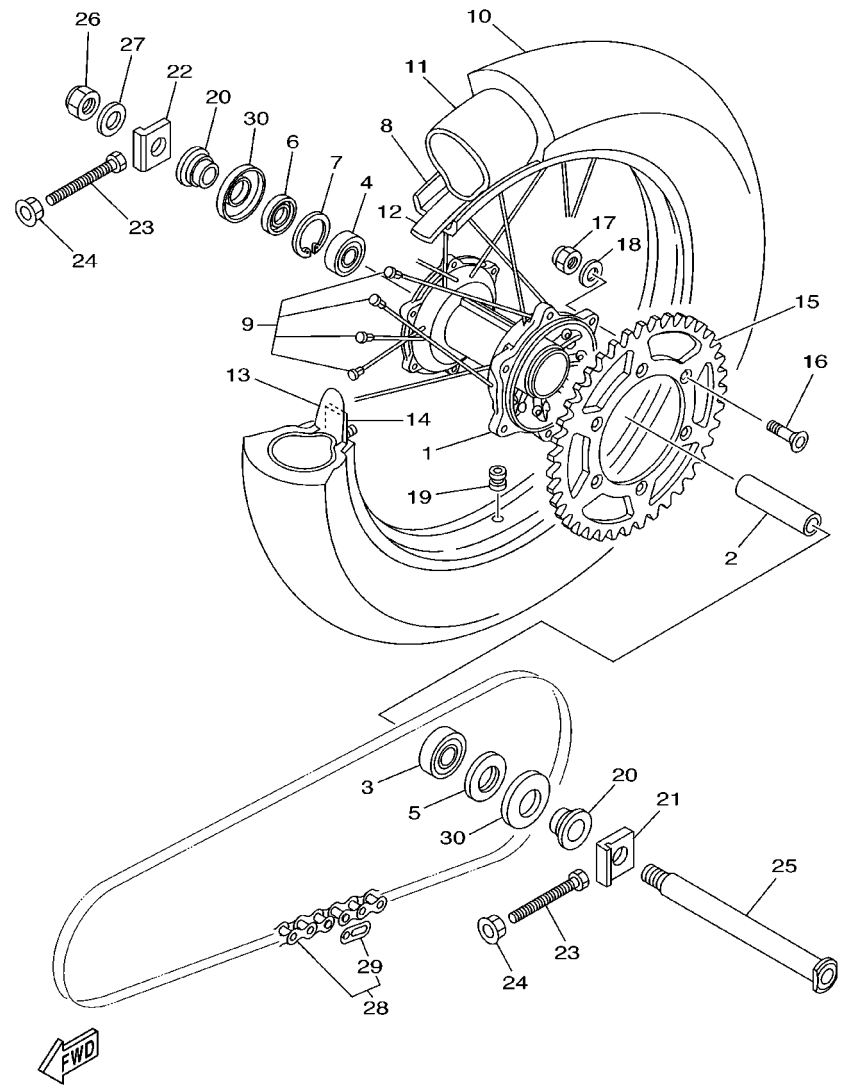

5NL1100-1300

FIG. 30 REAR WHEEL

REF. NO.	PART NO.	DESCRIPTION	5NL1	5NL2	5NL3	5NL4		REMARKS
1	5ET–25311–00	HUB, REAR	1	1	1	1		
2	5ET–25317–00	SPACER, BEARING	1	1	1	1		
3	93306–27205	BEARING	1	1	1	1		
4	93306–07202	BEARING	1	1	1	1		
5	93106–30044	OIL SEAL	1	1	1	1		
6	93106–30045	OIL SEAL	1	1	1	1		
7	99009–45500	CIRCLIP	1	1	1	1		
8	94418–19002	RIM (1.85–19)	1	1	1	1		
9	5HD–25304–00	SPOKE SET, REAR	1	1	1	1		
10	94110–1916A	TIRE (100/90–19 D739)	1			1		DUNLOP
	94110–1913B	TIRE (100/90–19 D755)		1		1		DUNLOP
	*	TIRE (100/90–19 MT320)		1				LM PIRELLI
	94110–1911A	TIRE (100/90–19 57M M78A)			1			BRIDGESTONE
11	94210–19222	TUBE (100/90–19)			1			BRIDGESTONE
	94210–19224	TUBE(100/90–19 TR4 BTL)	1	1		1		DUNLOP
	*	TUBE (110/90–19)		1				LM PIRELLI
12	94316–19156	BAND, RIM (1.85–19)			1			BRIDGESTONE
	94321–19135	BAND, RIM (90–100/90–19)	1	1		1		DUNLOP
	*	BAND, RIM (3.50–18)		1				LM
13	4XM–25394–00	SPACER, BEAD	1	1	1	1		
14	4XM–25364–00	DAMPER	1	1	1	1		
15	5ET–25448–00	SPROCKET, DRIVEN (48T)	1	1	1	1		STD
	5ET–25447–00	SPROCKET, DRIVEN (47T)	1	1	1	1		AP
	5ET–25449–00	SPROCKET, DRIVEN (49T)	1	1	1	1		AP
	5ET–25450–00	SPROCKET, DRIVEN (50T)	1	1	1	1		AP
	5ET–25451–00	SPROCKET, DRIVEN (51T)	1	1	1	1		AP
	5ET–25452–00	SPROCKET, DRIVEN (52T)	1	1	1	1		AP

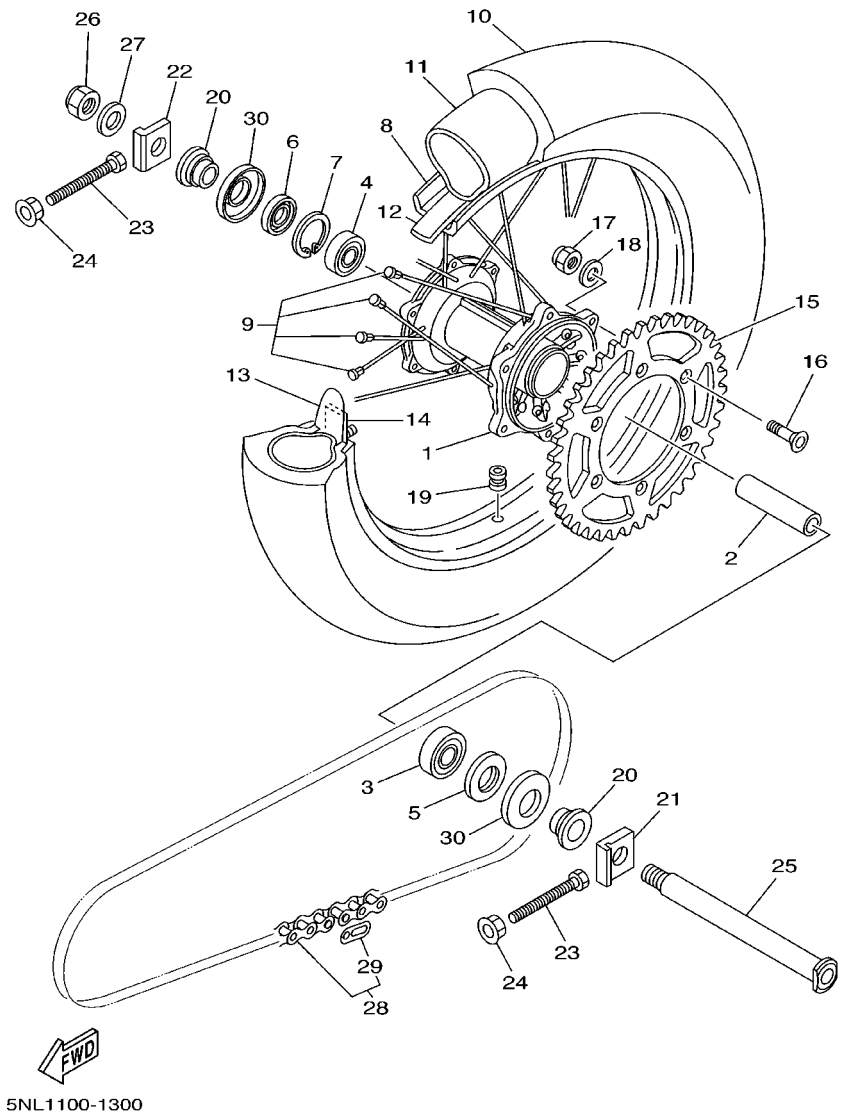

FIG. 30 REAR WHEEL

REF. NO.	PART NO.	DESCRIPTION	5NL1	5NL2	5NL3	5NL4		REMARKS
16	90109–081G1	BOLT	6	6	6	6		
17	90185–08169	NUT, SELF–LOCKING	6	6	6	6		
18	90201–08326	WASHER, PLATE	6	6	6	6		
19	90480–08608	GROMMET	1	1	1	1		
20	5ET–25383–00	COLLAR, WHEEL	2	2	2	2		
21	5ET–25388–00	PULLER, CHAIN 1	1	1	1	1		
22	5ET–25389–00	PULLER, CHAIN 2	1	1	1	1		
23	90101–08777	BOLT	2	2	2	2		
24	90179–08299	NUT	2	2	2	2		
25	5ET–25381–00	AXLE, WHEEL	1	1	1	1		
26	90185–20168	NUT, SELF–LOCKING	1	1	1	1		
27	90201–203U1	WASHER, PLATE	1	1	1	1		
28	9Y581–92111	CHAIN	1	1	1	1		
29	94681–68001	.JOINT, CHAIN	1	1	1	1		
30	5ET–25367–00	COVER, HUB DUST	2	2	2	2		

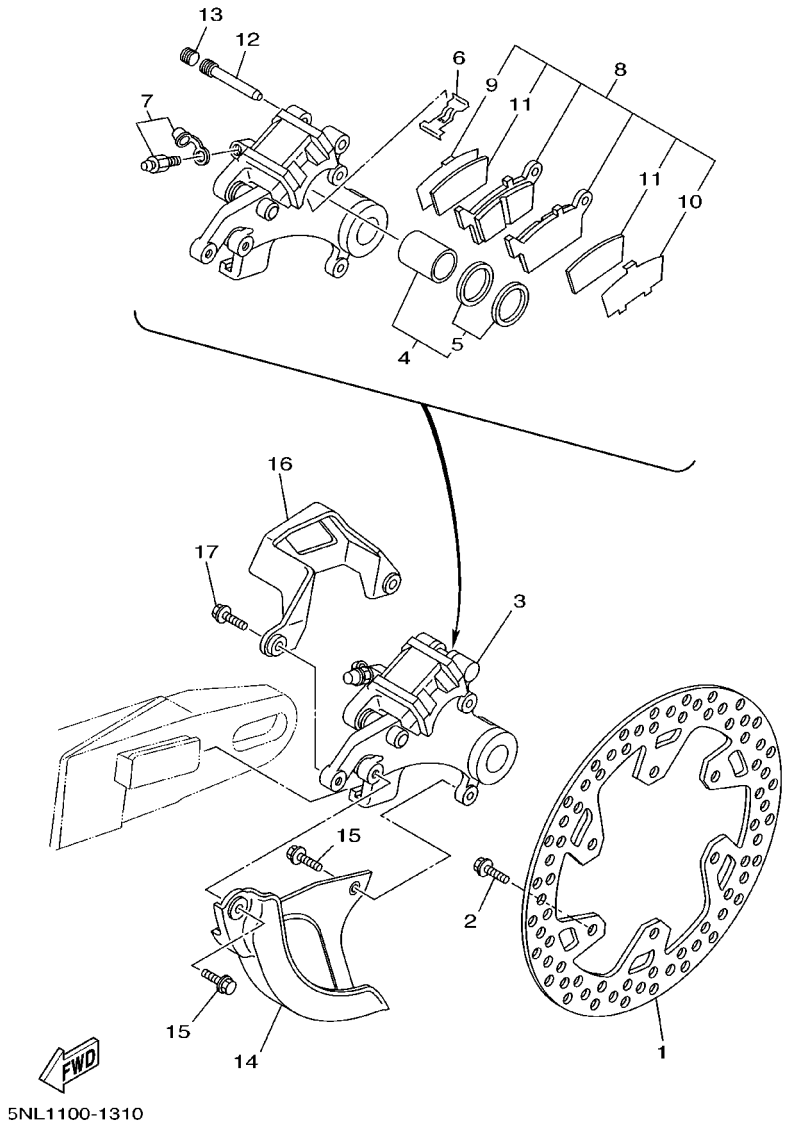

FIG. 31 REAR BRAKE CALIPER

REF. NO.	PART NO.	DESCRIPTION	5NL1	5NL2	5NL3	5NL4		REMARKS
1	5DH–2582W–00	DISC, REAR BRAKE 2	1	1	1	1		
2	90109–065G4	BOLT	6	6	6	6		
3	5GR–2580W–00	CALIPER ASSY, REAR 2	1		1	1		
	5MV–2580W–00	CALIPER ASSY, REAR 2		1				
4	5ET–W0057–50	.PISTON ASSY, CALIPER	1	1	1	1		
5	5ET–W0047–50	..CALIPER SEAL KIT	1	1	1	1		
6	5DH–25919–50	.SUPPORT, PAD	1	1	1	1		
7	1UY–W0048–50	.BLEED SCREW KIT	1	1	1	1		
8	5GR–W0046–00	.BRAKE PAD KIT 2	1		1	1		
	5MV–W0046–00	.BRAKE PAD KIT 2		1				
9	5DH–25828–50	..SHIM, CALIPER	1	1	1	1		
10	5DH–25827–50	..SHIM, CALIPER	1	1	1	1		
11	5GR–22898–50	..INSULATOR, HEAT	2	2	2	2		
12	8CR–25924–00	.PIN, PAD	1	1	1	1		
13	5DH–25916–00	.PLUG	1	1	1	1		
14	5DH–25718–01	PROTECTOR, DISK BRAKE	1	1	1	1		
15	95027–06012	BOLT, FLANGE	2	2	2	2		
16	4GY–27491–00	PROTECTOR	1	1	1	1		
17	95027–06016	BOLT, FLANGE	2	2	2	2		

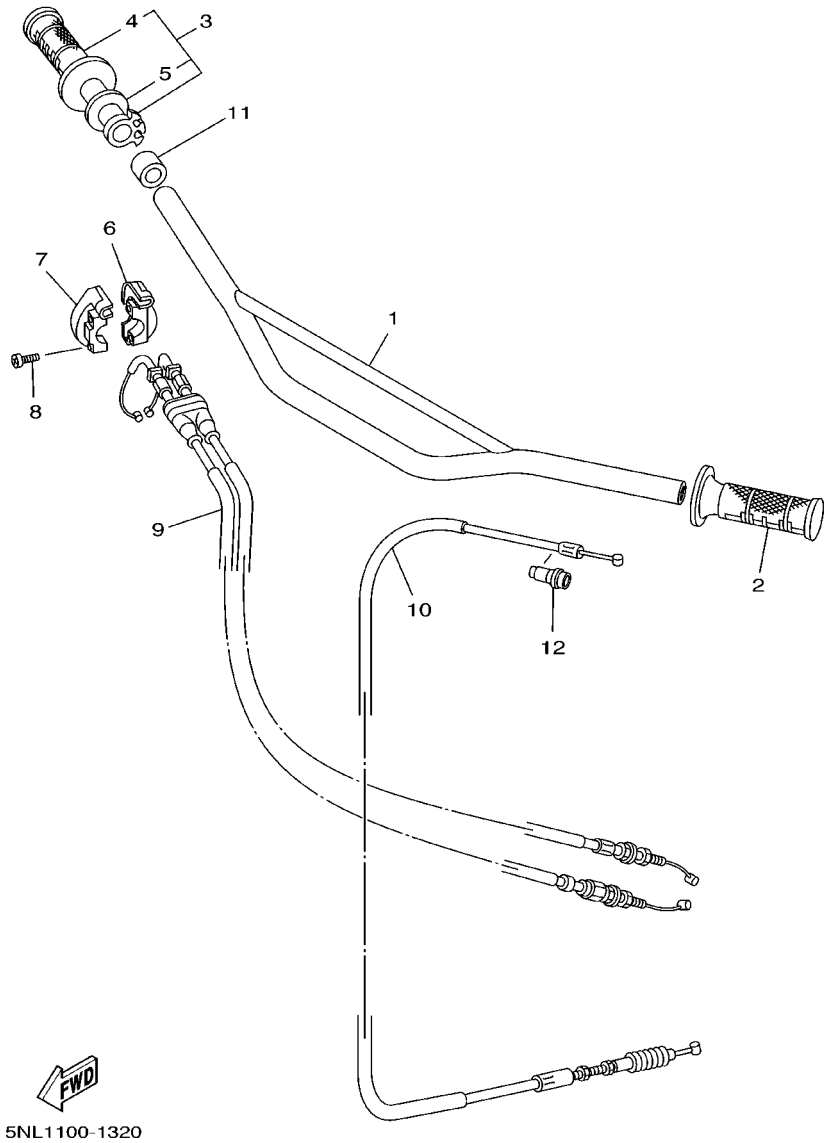

FIG. 32 STEERING HANDLE. CABLE

REF. NO.	PART NO.	DESCRIPTION	5NL1	5NL2	5NL3	5NL4		REMARKS
1	4XM–26111–00	HANDLEBAR	1	1	1	1		
2	4GY–26241–00	GRIP (LEFT)	1	1	1	1		
3	5BE–26240–00	GRIP ASSY	1	1	1	1		
4	4GY–26242–00	.GRIP (RIGHT)	1	1	1	1		
5	3Y1–26249–00	.RING, LEAF	1	1	1	1		
6	5BE–26281–00	CAP, GRIP UPPER	1	1	1	1		
7	5BE–26282–00	CAP, GRIP LOWER	1	1	1	1		
8	98507–05020	SCREW, PAN HEAD	2	2	2	2		
9	5JG–26302–50	THROTTLE CABLE ASSY	1	1	1	1		
10	5JG–26335–00	CABLE, CLUTCH	1	1	1	1		
11	90387–225N2	COLLAR	1	1	1	1		
12	5HD–26342–00	BOOT, CABLE	1	1	1	1		

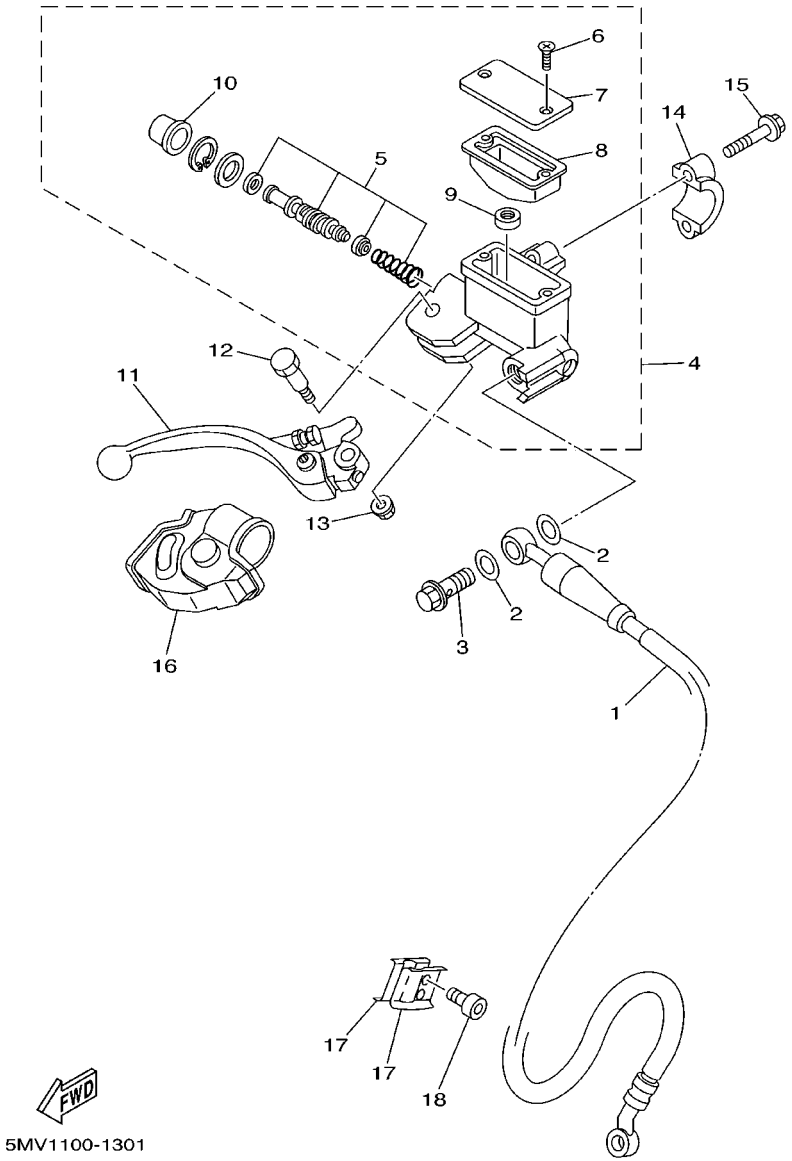

FIG. 33 FRONT MASTER CYLINDER

REF. NO.	PART NO.	DESCRIPTION	5NL1	5NL2	5NL3	5NL4		REMARKS
1	5ET–25872–00	HOSE, BRAKE 1	1	1	1	1		
2	90201–10118	WASHER, PLATE	4	4	4	4		
3	90401–10172	BOLT, UNION	2	2	2	2		
4	5MV–W2587–00	MASTER CYLINDER SUB ASSY	1	1	1	1		
5	5MV–W0041–00	.CYLINDER KIT, MASTER	1	1	1	1		
6	98706–04012	.SCREW, FLAT HEAD	2	2	2	2		
7	5MV–25852–00	.CAP, RESERVOIR	1	1	1	1		
8	56A–25854–00	.DIAPHRAGM, RESERVOIR	1	1	1	1		
9	8CR–25715–00	.SEPARATOR ASSY	1	1	1	1		
10	5G2–25868–00	.BOOT, MASTER CYLINDER	1	1	1	1		
11	5MV–83922–00	LEVER 2	1	1	1	1		
12	5MV–2589F–00	BOLT, LEVER	1	1	1	1		
13	95701–06500	NUT, FLANGE	1	1	1	1		
14	5MV–25867–00	BRACKET, MASTER CYLINDER	1	1	1	1		
15	5MV–25833–00	BOLT, FITTING	2	2	2	2		
16	5MV–26372–00	COVER, HANDLE LEVER 1	1	1	1	1		
17	90465–16258	CLAMP	2	2	2	2		
18	91317–06014	BOLT	2	2	2	2		

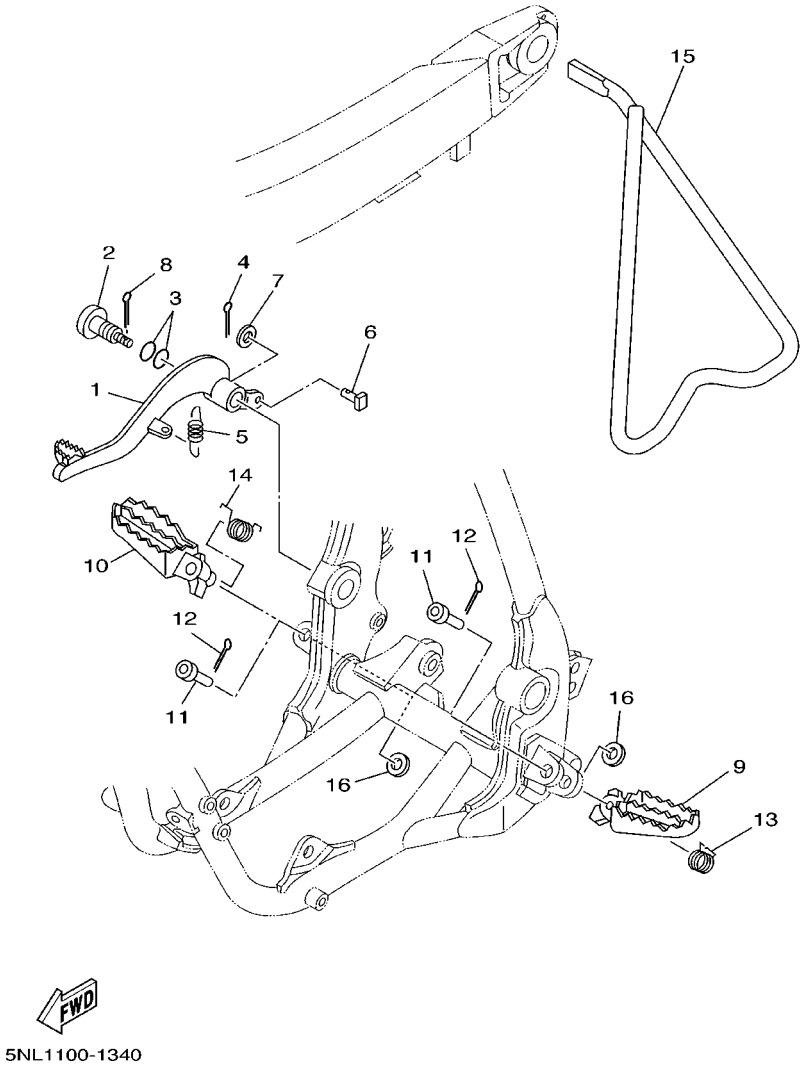

FIG. 34 STAND. FOOTREST

REF. NO.	PART NO.	DESCRIPTION	5NL1	5NL2	5NL3	5NL4		REMARKS
1	4XM–27200–00	PEDAL, BRAKE	1	1	1	1		
2	5JG–27217–00	BOLT	1	1	1	1		
3	93210–11073	O–RING	2	2	2	2		
4	91401–20012	PIN, COTTER	1	1	1	1		
5	90506–16500	SPRING, TENSION	1	1	1	1		
6	90240–08120	PIN, CLEVIS	1	1	1	1		
7	90201–08089	WASHER, PLATE	1	1	1	1		
8	90468–16191	CLIP	1	1	1	1		
9	5ET–27411–00	FOOTREST 1	1	1	1	1		
10	5ET–27421–00	FOOTREST 2	1	1	1	1		
11	90240–10142	PIN, CLEVIS	2	2	2	2		
12	91401–25015	PIN, COTTER	2	2	2	2		
13	90508–282B8	SPRING, TORSION	1	1	1	1		
14	90508–282B9	SPRING, TORSION	1	1	1	1		
15	5ET–27311–00	STAND, SIDE	1	1	1	1		
16	90201–10119	WASHER, PLATE	2	2	2	2		

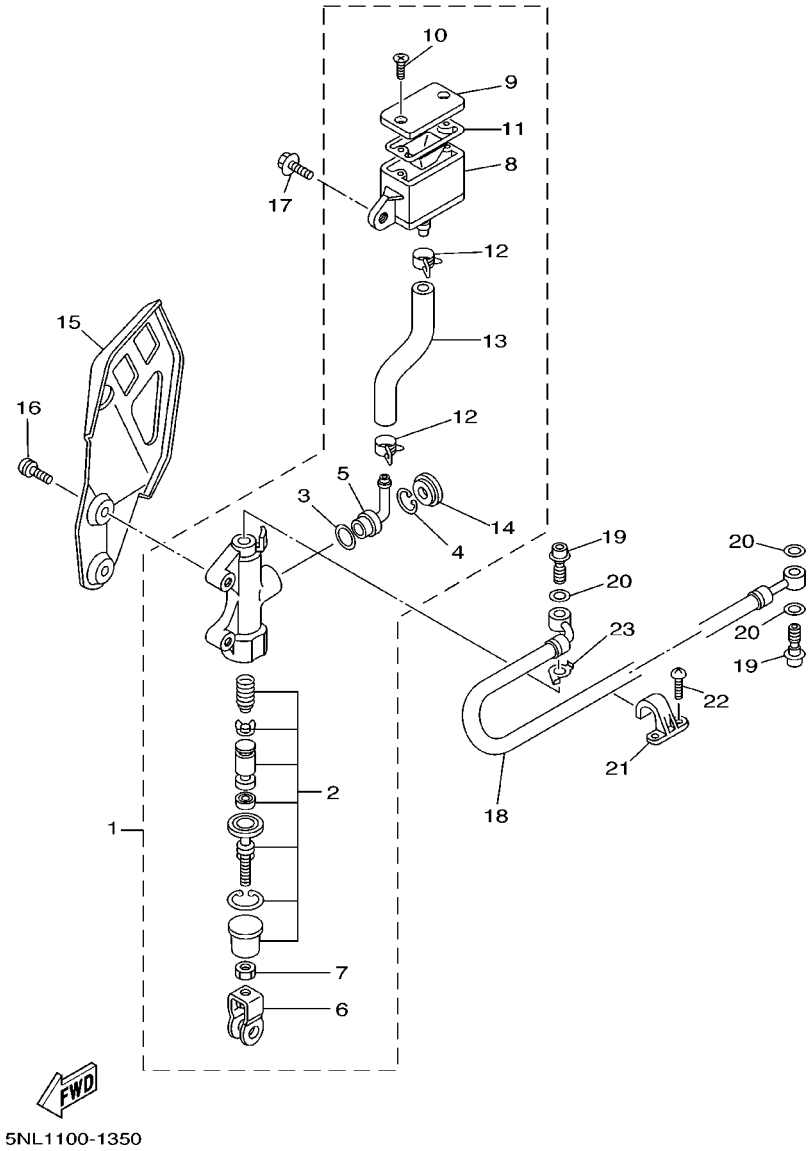

FIG. 35 REAR MASTER CYLINDER

REF. NO.	PART NO.	DESCRIPTION	5NL1	5NL2	5NL3	5NL4		REMARKS
1	5JG–2583V–00	RR. MASTER CYLINDER ASSY.	1	1	1	1		
2	4SS–W0042–50	.CYLINDER KIT, MASTER	1	1	1	1		
3	93210–15620	.O–RING	1	1	1	1		
4	2VN–25866–00	.CIRCLIP	1	1	1	1		
5	4ML–2582A–50	.JOINT	1	1	1	1		
6	3SP–27222–00	.JOINT	1	1	1	1		
7	95301–08700	.NUT	2	2	2	2		
8	5BE–25894–00	.TANK, RESERVOIR	1	1	1	1		
9	5BE–25852–00	.CAP, RESERVOIR	1	1	1	1		
10	98706–04040	.SCREW, FLAT HEAD	2	2	2	2		
11	56A–25854–00	.DIAPHRAGM, RESERVOIR	1	1	1	1		
12	90467–12085	.CLIP	2	2	2	2		
13	5BE–25895–00	.HOSE, RESERVOIR	1	1	1	1		
14	3FV–2589A–00	.COVER, DUST	1	1	1	1		
15	5BE–2117M–01	COVER 2	1	1	1	1		
16	92014–06016	BOLT, BUTTON HEAD	2	2	2	2		
17	90105–06553	BOLT, WASHER BASED	1	1	1	1		
18	5MV–25873–00	HOSE, BRAKE 2	1	1	1	1		
19	90401–10172	BOLT, UNION	2	2	2	2		
20	90201–10118	WASHER, PLATE	3	3	3	3		
21	2VM–25876–00	HOLDER, BRAKE HOSE 2	2	2	2	2		
22	97780–50510	SCREW, TAPPING	4	4	4	4		
23	5BE–25844–01	WASHER, LOCK	1	1	1	1		

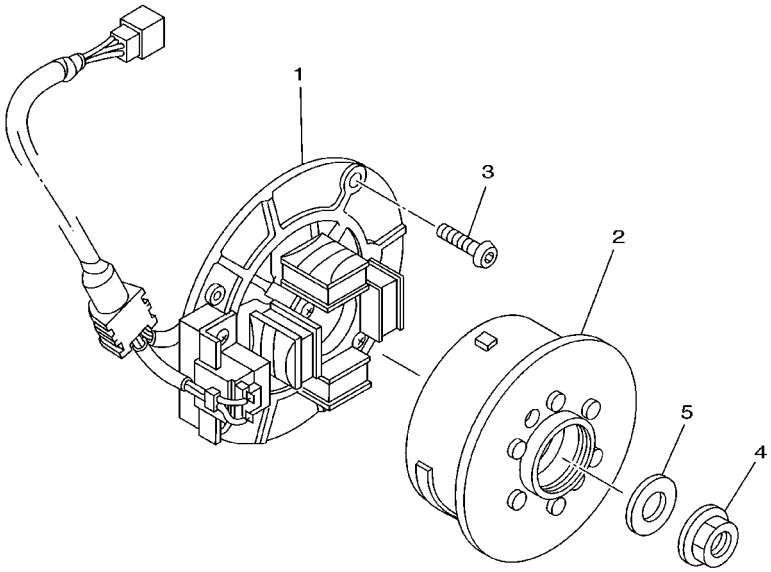

5NL1100-1360

FIG. 36 GENERATOR

REF. NO.	PART NO.	DESCRIPTION	5NL1	5NL2	5NL3	5NL4		REMARKS
1	5BE–85560–10	BASE ASSY	1	1	1	1		
2	5JG–85550–11	ROTOR ASSY	1	1	1	1		
3	90149–06324	SCREW	3	3	3	3		
4	90179–10247	NUT	1	1	1	1		
5	90201–101J1	WASHER, PLATE	1	1	1	1		

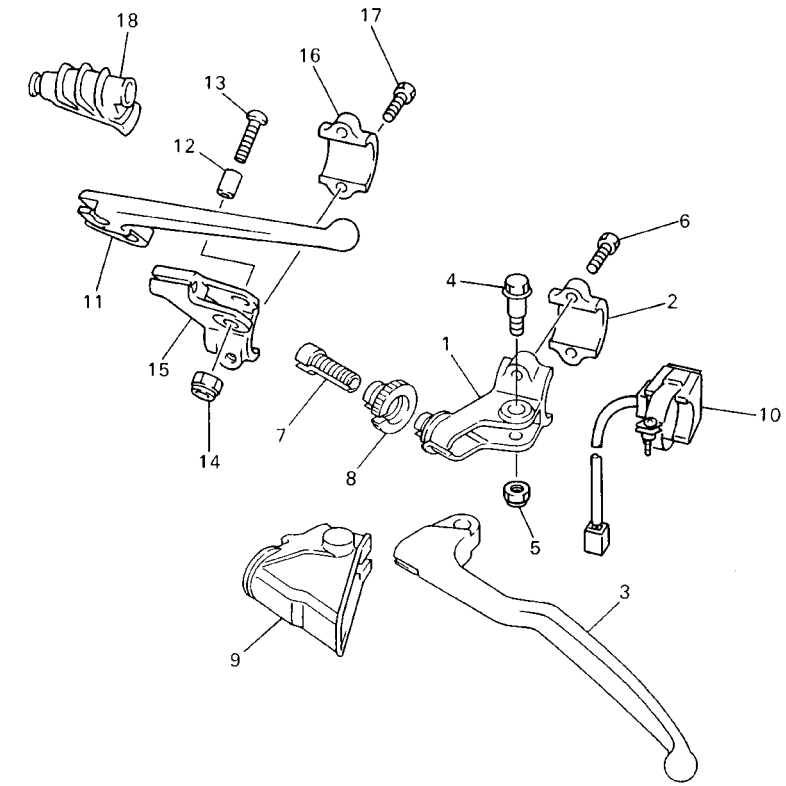

FIG. 37 HANDLE SWITCH. LEVER

REF. NO.	PART NO.	DESCRIPTION	5NL1	5NL2	5NL3	5NL4		REMARKS
1	5HD–82911–00	HOLDER, LEVER 1	1	1	1	1		
2	38V–82913–00	HOLDER, LEVER LOWER 1	1	1	1	1		
3	5MV–83912–00	LEVER 1	1	1	1	1		
4	90109–06027	BOLT	1	1	1	1		
5	95607–06100	NUT, U	1	1	1	1		
6	97007–05016	BOLT	2	2	2	2		
7	5HD–26337–00	BOLT, ADJUSTING	1	1	1	1		
8	5HD–83951–00	BOLT, CABLE ADJUSTING	1	1	1	1		
9	5HD–26372–00	COVER, HANDLE LEVER 1	1	1	1	1		
10	23X–83976–00	SWITCH, HANDLE 1	1	1	1	1		
11	583–83981–00	LEVER, DECOMPRESSION	1	1	1	1		
12	5BE–83913–00	COLLAR, LEVER 1	1	1	1	1		
13	98907–05020	SCREW, BIND	1	1	1	1		
14	95607–05100	NUT, U	1	1	1	1		
15	5BE–82912–00	HOLDER, LEVER UPPER 1	1	1	1	1		
16	38V–82913–00	HOLDER, LEVER LOWER 1	1	1	1	1		
17	97007–05016	BOLT	2	2	2	2		
18	583–26352–00	COVER, DECOMPRESSION CABLE	1	1	1	1		

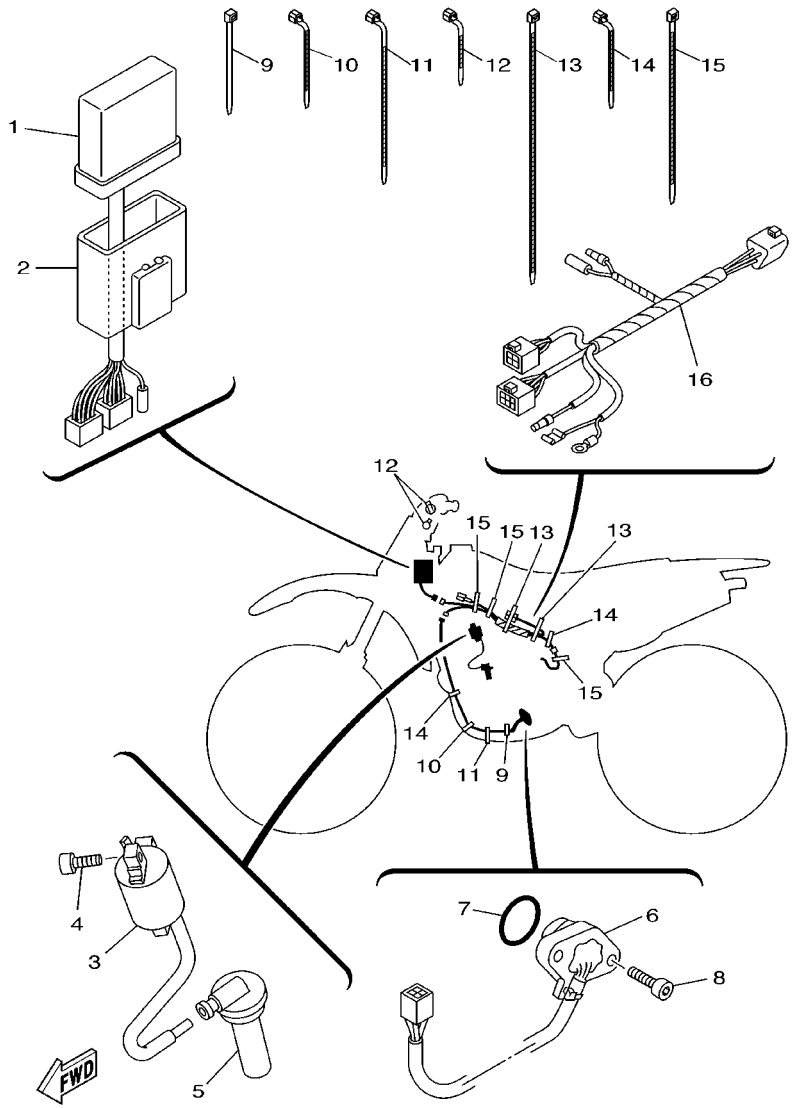

5NL1100-1380

FIG. 38 ELECTRICAL 1

REF. NO.	PART NO.	DESCRIPTION	5NL1	5NL2	5NL3	5NL4		REMARKS
1	5NL–85540–00	C.D.I. UNIT ASSY	1	1	1	1		
2	5NL–85546–00	BAND	1	1	1	1		
3	4SR–82310–00	IGNITION COIL ASSY	1	1	1	1		
4	91317–06016	BOLT	2	2	2	2		
5	5BE–82370–00	PLUG CAP ASSY	1	1	1	1		
6	5BE–82540–01	NEUTRAL SWITCH ASSY	1	1	1	1		
7	93210–21276	O–RING	1	1	1	1		
8	90154–05073	SCREW, BINDING	2	2	2	2		
9	90464–16061	CLAMP	1	1	1	1		
10	90464–13073	CLAMP	1	1	1	1		
11	90460–15126	CLAMP, HOSE	1	1	1	1		
12	90464–13077	CLAMP	2	2	2	2		
13	90464–15152	CLAMP	2	2	2	2		
14	90464–13073	CLAMP	3	3	3	3		
15	90465–13275	CLAMP	2	2	2	2		
16	5NL–82509–00	WIRE, SUB LEAD	1	1	1	1		

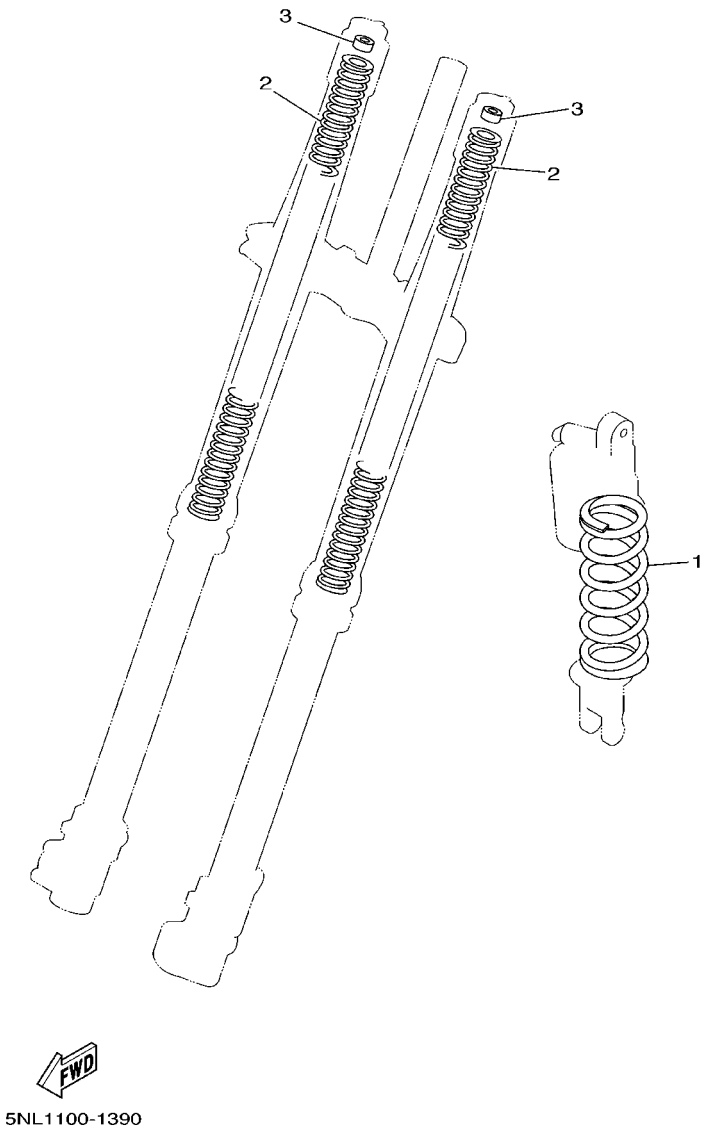

FIG. 39 ALTERNATE (CHASSIS)

REF. NO.	PART NO.	DESCRIPTION	5NL1	5NL2	5NL3	5NL4		REMARKS
1	5DH–22212–70	SPRING (K=4.4)	1	1	1	1		AP
	5DH–22212–10	SPRING (K=4.6)	1	1	1	1		AP
	5DH–22212–20	SPRING (K=4.8)	1	1	1	1		AP
	5DH–22212–30	SPRING (K=5.0)	1	1	1	1		AP
	5DH–22212–40	SPRING (K=5.2)	1	1	1	1		AP
	5DH–22212–50	SPRING (K=5.4)	1	1	1	1		AP
	5DH–22212–60	SPRING (K=5.6)	1	1	1	1		AP
	5ET–22212–20	SPRING (K=APPROX.4.6)	1	1	1	1		AP
	5ET–22212–00	SPRING (K=APPROX.4.8)	1	1	1	1		AP
	5ET–22212–10	SPRING (K=APPROX.5.0)	1	1	1	1		AP
	5ET–22212–30	SPRING (K=APPROX.5.2)	1	1	1	1		AP
	5ET–22212–40	SPRING (K=APPROX.5.4)	1	1	1	1		AP
	5ET–22212–50	SPRING (K=APPROX.5.6)	1	1	1	1		AP
2	4SS–23141–10	SPRING, FRONT FORK (K=0.38)	2	2	2	2		AP
	4SS–23141–20	SPRING, FRONT FORK (K=0.39)	2	2	2	2		AP
	4SS–23141–30	SPRING, FRONT FORK (K=0.40)	2	2	2	2		AP
	4SS–23141–40	SPRING, FRONT FORK (K=0.41)	2	2	2	2		AP
	4SS–23141–50	SPRING, FRONT FORK (K=0.42)	2	2	2	2		AP
	4SS–23141–60	SPRING, FRONT FORK (K=0.43)	2	2	2	2		AP
	4SS–23141–70	SPRING, FRONT FORK (K=0.44)	2	2	2	2		AP
	5BE–23141–L0	SPRING, FRONT FORK (K=0.45)	2	2	2	2		AP
	5BE–23141–00	SPRING, FRONT FORK (K=0.46)	2	2	2	2		AP
	5GR–23141–00	SPRING, FRONT FORK (K=0.47)	2	2	2	2		AP
	5ET–23141–20	SPRING (K=APPROX.0.40)	2	2	2	2		AP
	5ET–23141–00	SPRING (K=APPROX.0.41)	2	2	2	2		AP
	5ET–23141–30	SPRING (K=APPROX.0.42)	2	2	2	2		AP
	5ET–23141–10	SPRING (K=APPROX.0.43)	2	2	2	2		AP

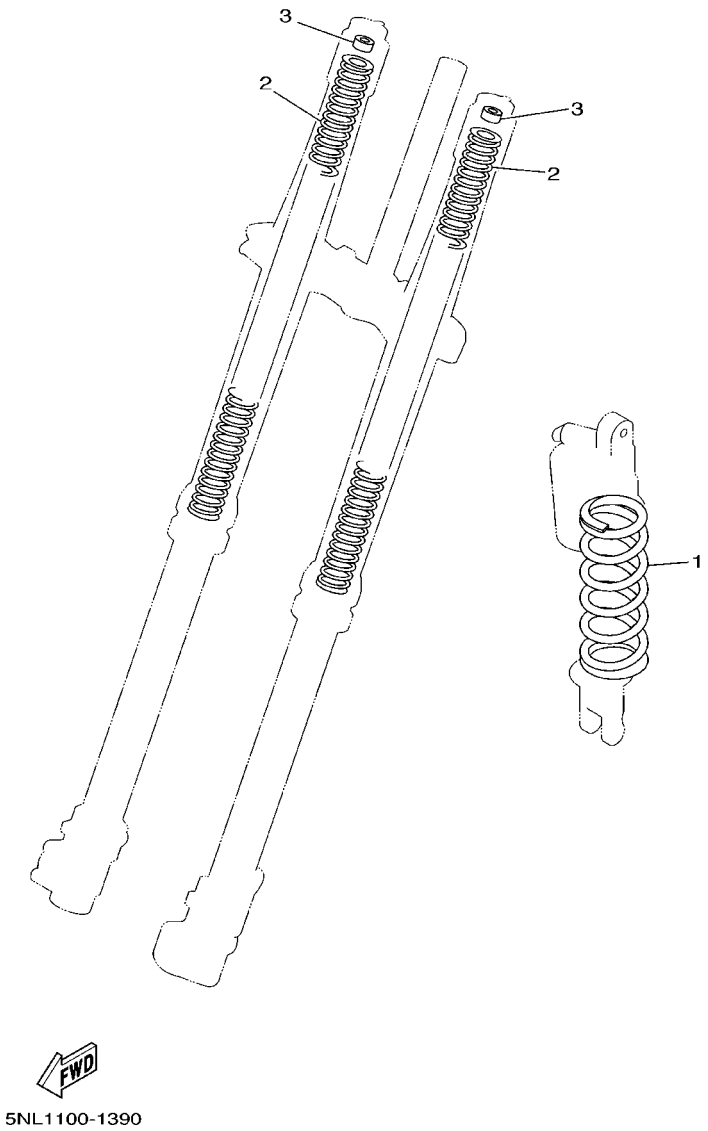

FIG. 39 ALTERNATE (CHASSIS)

REF. NO.	PART NO.	DESCRIPTION	5NL1	5NL2	5NL3	5NL4		REMARKS
2	5ET–23141–40	SPRING (K=APPROX.0.44)	2	2	2	2		AP
3	4SS–23364–L0	COLLAR 2	2	2	2	2		UN AP

NUMERICAL INDEX

PART NO.	GRID NO.
5MV–W0041–00	E – 6
4SS–W0042–50	E – 8
5MV–W0045–00	D – 15
5GR–W0046–00	E – 4
5MV–W0046–00	E – 4
3JD–W0047–00	D – 15
5ET–W0047–50	E – 4
1UY–W0048–50	D – 15
	E – 4
4EW–W0057–00	D – 15
5ET–W0057–50	E – 4
5MV–W2587–00	E – 6
5NL–11102–00	B – 2
4KG–1111G–00	B – 3
5NL–11133–10	B – 2
5NL–11134–10	B – 2
5BE–11166–00	B – 3
371–11167–01	B – 3
5BE–11167–00	B – 3
5NL–11181–00	B – 2
5NL–11191–00	B – 2
5NL–11193–00	B – 3
5NL–11311–00	B – 3
5NL–11351–00	B – 3
5JG–11387–00	B – 3
5NL–11400–00	B – 4
5NL–11412–00	B – 4
5NL–11422–00	B – 4
5NL–11454–00	B – 4
5NL–11455–00	B – 4
5NL–11531–00	B – 4
5NL–11536–00	B – 4
5NL–11603–00	B – 4
5NL–11631–00	B – 4
5NL–11633–00	B – 4
5NL–11651–00	B – 4
5NL–11681–00	B – 4
5NL–12111–00	B – 5
5NL–12112–00	B – 5
5NL–12113–00	B – 5
5NL–12114–00	B – 5
5NL–12116–00	B – 5
1HX–12117–00	B – 5
1WG–12117–00	B – 5
1HX–12118–00	B – 5
1WG–12118–00	B – 5
4SV–12119–00	B – 5
4TV–12119–00	B – 5

PART NO.	GRID NO.
5NL–12121–00	B – 5
3GM–12126–00	B – 5
3FV–12153–00	B – 6
3FV–12153–10	B – 6
3FV–12153–20	B – 6
3FV–12153–30	B – 6
3LN–12153–00	B – 6
3LN–12153–10	B – 6
3LN–12153–20	B – 6
3LN–12153–30	B – 6
1HX–12168–A0	B – 5
1HX–12168–F0	B – 5
1HX–12168–H1	B – 5
1HX–12168–K1	B – 5
1HX–12168–M1	B – 5
1HX–12168–R1	B – 5
1HX–12168–U1	B – 5
1HX–12168–W1	B – 5
1HX–12168–Y1	B – 5
1HX–12168–00	B – 5
1HX–12168–20	B – 5
1HX–12168–40	B – 5
1HX–12168–60	B – 5
1HX–12168–80	B – 5
1HX–12169–E0	B – 6
1HX–12169–G0	B – 6
1HX–12169–J0	B – 6
1HX–12169–L0	B – 6
1HX–12169–N0	B – 6
1HX–12169–T0	B – 6
1HX–12169–11	B – 6
1HX–12169–31	B – 6
1HX–12169–50	B – 6
1HX–12169–70	B – 6
1HX–12169–90	B – 6
5NL–12170–00	B – 7
5NL–12180–00	B – 7
5BE–12210–00	B – 7
4FM–12213–00	B – 7
5BE–12241–00	B – 7
5NL–12251–00	B – 7
5NL–12252–00	B – 7
5BE–12280–10	B – 7
5NL–12283–00	B – 7
5BE–12292–10	B – 7
5NL–1240A–00	B – 9
5NL–12422–00	B – 8
5NL–12439–00	B – 8

PART NO.	GRID NO.
5DH–12451–00	B – 8
5NL–12459–00	B – 8
5NL–12461–00	B – 9
5HD–12462–00	B – 9
5NL–12481–00	B – 9
5NL–12564–00	C – 6
5NL–12576–00	B – 9
5NL–12577–00	B – 9
5NL–12578–00	B – 9
5NL–12579–00	B – 9
583–13113–00	B – 12
5NL–13161–00	B – 12
5NL–13171–00	B – 12
5NL–13300–00	B – 10
5NL–13320–00	B – 10
5NL–13341–00	B – 10
5BE–13342–00	B – 10
5NL–13411–00	B – 10
5NL–13412–00	B – 10
5NL–13416–00	B – 10
1UY–13440–02	B – 12
5BE–13447–00	B – 12
5NL–13464–00	B – 10
5NL–13465–00	B – 10
5NL–13597–00	B – 13
5NL–14101–00	B – 14
5NL–14101–10	B – 14
5NL–14105–00	C – 2
5BE–14107–00	C – 2
4MX–14115–00	C – 3
3TJ–14137–40	C – 3
5BE–14146–00	C – 3
3TJ–14159–40	B – 15
5JG–14171–00	C – 2
5NL–14196–00	C – 3
5JG–14197–00	C – 3
4YR–14216–00	C – 3
5BE–14216–00	C – 2
5JG–14264–00	B – 15
3TJ–14267–40	B – 14
5JG–14275–00	B – 15
3TJ–14293–40	C – 2
5JG–14293–01	B – 13
3TJ–14325–40	C – 2
5JG–14346–00	C – 3
5JG–14371–00	C – 2
5JG–14379–00	C – 2
5JG–14388–00	B – 14

PART NO.	GRID NO.
5JG–1440F–01	B – 13
5JG–14401–00	B – 13
5BE–1441A–10	B – 13
5BE–1441E–10	B – 13
5JG–14417–00	B – 13
5JG–14428–00	B – 13
5BE–1443E–00	B – 13
5BE–14449–00	C – 3
4XM–14451–00	B – 13
5JG–14453–00	B – 13
5BE–14458–00	B – 13
3JD–14459–01	B – 13
5MV–14477–00	B – 13
5JG–14521–00	B – 15
5JG–14522–00	B – 14
5JG–14531–00	C – 3
3TJ–14536–40	C – 2
5JG–14546–00	B – 14
676–14548–00	C – 2
4YR–14557–00	C – 3
4FN–14561–00	B – 13
4MX–14561–00	C – 3
6H4–14561–00	C – 2
5BE–14562–00	C – 3
5JG–14565–00	C – 3
5NL–14591–00	C – 3
5NL–14611–00	C – 4
5NL–14613–00	C – 4
5NL–14628–00	C – 4
5NL–1469A–00	C – 4
5BE–1469E–00	C – 4
5BE–14747–00	C – 4
5NL–14753–00	C – 4
5NL–14753–10	C – 4
3VD–14755–00	C – 4
4BD–14766–00	C – 4
5NL–14788–00	C – 4
5JG–14916–JL	B – 14
5JG–14916–JM	B – 14
5JG–14916–JN	B – 14
5JG–14916–JP	B – 14
5JG–14916–JR	B – 14
5JG–14916–JS	B – 14
5JG–14916–J1	B – 14
5NL–14916–EL	B – 14
5NL–14916–EM	B – 14
5NL–14916–EN	B – 14
5NL–14916–EP	B – 14

PART NO.	GRID NO.
5NL–14916–ER	B – 14
5NL–14916–ES	B – 14
5NL–14916–E1	B – 14
5JG–14922–00	C – 3
3TJ–14933–40	C – 2
4FN–14934–00	C – 3
3TJ–1494F–12	B – 15
3TJ–1494F–13	B – 15
3TJ–1494F–14	C – 2
3TJ–1494F–15	C – 2
3TJ–1494F–16	B – 15
3TJ–1494F–17	C – 2
3TJ–1494F–18	C – 2
3TJ–1494F–19	C – 2
3TJ–1494F–20	C – 2
4JT–1494F–17	C – 3
4JT–1494F–21	C – 3
4JT–1494F–25	C – 3
4JT–1494F–28	C – 3
4JT–1494F–30	C – 3
4JT–1494F–32	C – 3
4JT–1494F–34	C – 3
5JG–14940–05	C – 2
5JG–14940–06	C – 2
5JG–14940–07	C – 2
5JG–14940–08	C – 2
5JG–14940–09	C – 2
5JG–14940–75	C – 2
3TJ–14943–47	B – 15
4MX–14943–40	B – 15
4MX–14943–41	B – 15
4MX–14943–42	B – 15
4MX–14943–43	B – 15
4MX–14943–44	B – 15
4MX–14943–45	B – 15
4MX–14943–91	B – 15
4MX–14943–92	B – 15
4MX–14943–93	B – 15
4MX–14943–94	B – 15
4MX–14943–95	B – 15
7A9–14943–27	C – 2
5JG–14947–00	B – 15
4MX–14948–01	B – 15
4MX–14948–02	B – 15
4MX–14948–03	B – 15
4MX–14948–04	B – 15
4MX–14948–05	B – 15
4MX–14948–06	B – 15

PART NO.	GRID NO.
4MX–14948–07	B – 15
5JG–14951–00	B – 14
5JG–14959–00	B – 14
5JG–14984–00	C – 2
4SR–14985–00	C – 2
5JG–14987–00	C – 3
4FN–14997–00	B – 14
5NL–15150–00	C – 5
5NL–15362–00	C – 15
4JT–15381–01	C – 5
5BE–15383–01	C – 5
5NL–15388–00	C – 5
5NL–15411–00	C – 6
5NL–15415–00	C – 6
5BE–15421–00	C – 5
5NL–15431–00	C – 6
5NL–15441–01	C – 5
5NL–15451–00	C – 6
5NL–15453–00	C – 6
5NL–15462–00	C – 6
5NL–15601–00	C – 7
5NL–15620–00	C – 7
5NL–15621–00	C – 7
5NL–15641–00	C – 7
5NL–15651–00	C – 7
5NL–15664–00	C – 7
2NX–15668–00	C – 7
4GY–15671–00	C – 7
214–15674–00	C – 7
214–15686–00	C – 7
5NL–16111–00	C – 8
5NL–16150–00	C – 8
5NL–16154–00	C – 8
3XJ–16321–00	C – 8
5DH–16321–00	C – 8
5NL–16325–00	C – 8
5NL–16325–10	C – 8
5HD–16351–00	C – 8
5NL–16356–00	C – 8
5NL–16357–00	C – 8
5NL–16371–00	C – 8
5JG–16381–00	C – 8
5NL–16383–00	C – 8
3XV–16384–10	C – 8
4JT–16384–00	C – 8
5NL–17121–00	C – 10
5NL–17131–00	C – 10
5NL–17141–00	C – 10

NUMERICAL INDEX

PART NO.	GRID NO.
5NL–17151–00	C – 10
5NL–17211–00	C – 10
5NL–17221–00	C – 10
5NL–17231–00	C – 10
5NL–17241–00	C – 10
5NL–17251–00	C – 10
5NL–17411–00	C – 10
5NL–17421–00	C – 10
5NL–17466–00	C – 5
5NL–17471–00	C – 11
5NL–18101–00	C – 13
5NL–18110–00	C – 13
5LP–18122–00	C – 13
3XK–18140–00	C – 12
5BE–18172–00	C – 13
3XJ–18173–00	C – 13
3XJ–18178–00	C – 13
3XJ–18182–00	C – 13
3XJ–18184–00	C – 13
4EW–18185–00	C – 13
5NL–18501–00	C – 12
5NL–18502–00	C – 12
5NL–18503–00	C – 12
5NL–18541–00	C – 12
4BA–18542–00	C – 12
5DH–18562–00	C – 5
5NL–21101–00–P0	C – 14
5BE–2117M–01	E – 8
5JG–21190–50–P0	C – 14
5HD–2135F–00	D – 5
5NL–21417–00	C – 15
5NL–21417–10	C – 15
5NL–21425–00	C – 14
5NL–21425–10	C – 14
5NL–2147A–00	C – 15
5NL–21471–00	C – 15
5HD–21511–00	D – 2
4XL–2153A–10	D – 11
4ES–2153E–01	D – 2
3FY–21575–01	D – 3
5BE–21611–10	D – 2
5NL–2163G–00	D – 2
5BE–21642–00	D – 2
5BE–21711–00	D – 3
5NL–2172A–00	D – 3
5BE–21721–00	D – 3
5JG–2173E–50	D – 3
5JG–2173F–50	D – 3

PART NO.	GRID NO.
5NL–21731–00	D – 3
5BE–2174A–00	D – 3
5NL–21741–00	D – 3
3JD–21748–00	D – 2
5MV–2175C–00	D – 3
5BE–21756–00	C – 14
5JG–21781–50	D – 3
5MV–22110–00	D – 4
4XM–22128–00	D – 4
5DH–22141–00	D – 4
5MV–22151–00	D – 4
5JG–22156–00	D – 4
5ET–2217A–00	D – 4
5DH–2217F–01	D – 5
5MV–22176–00	D – 6
3JD–22178–10	C – 14
4EW–22178–00	C – 14
5MV–22184–00	D – 6
4XM–22199–00	D – 4
5NL–22201–00	D – 6
5NL–22201–10	D – 6
5NL–22201–20	D – 6
5NL–22201–30	D – 6
5NL–22201–40	D – 6
5NL–22210–00	D – 6
5NL–22210–10	D – 6
5NL–22210–20	D – 6
5NL–22210–30	D – 6
5NL–22210–40	D – 6
5DH–22212–10	E – 12
5DH–22212–20	D – 6
	E – 12
5DH–22212–30	E – 12
5DH–22212–40	E – 12
5DH–22212–50	E – 12
5DH–22212–60	E – 12
5DH–22212–70	E – 12
5ET–22212–00	E – 12
5ET–22212–10	D – 6
	E – 12
5ET–22212–20	E – 12
5ET–22212–30	E – 12
5ET–22212–40	E – 12
5ET–22212–50	E – 12
3SP–22213–00	D – 6
5DH–22214–00	D – 6
5MV–22224–00	D – 6
4JX–22226–00	D – 6

PART NO.	GRID NO.
3SP–22234–00	D – 6
5DH–22253–00	D – 6
5MV–22253–00	D – 6
5ET–22355–00	D – 4
3V6–22358–00	D – 12
4EW–22474–00	D – 6
3JE–22475–00	D – 6
5MV–22475–00	D – 6
5GR–22898–50	E – 4
5NL–23102–00	D – 9
5NL–23102–10	D – 9
5NL–23103–00	D – 9
5NL–23103–10	D – 9
5BF–23110–L0	D – 10
5MV–23111–L0	D – 9
	D – 10
5DH–23118–L0	D – 9
	D – 10
3JD–2312G–L0	D – 9
	D – 10
5DH–23120–L0	D – 9
5ET–23125–L0	D – 9
	D – 10
5HD–23136–L0	D – 9
	D – 10
5DH–2314E–00	D – 15
5DH–2314F–L0	D – 10
4SS–2314G–L0	D – 10
5DH–2314H–00	D – 11
5DH–2314J–00	D – 11
4SS–23141–10	E – 12
4SS–23141–20	E – 12
4SS–23141–30	E – 12
4SS–23141–40	E – 12
4SS–23141–50	E – 12
4SS–23141–60	E – 12
4SS–23141–70	E – 12
5BE–23141–L0	E – 12
5BE–23141–00	E – 12
5CU–23141–L0	D – 9
	D – 10
5ET–23141–00	E – 12
5ET–23141–10	E – 12
5ET–23141–20	E – 12
5ET–23141–30	E – 12
5ET–23141–40	E – 13
5GR–23141–00	E – 12
5NL–23141–00	D – 9

PART NO.	GRID NO.
5NL–23141–00	D – 10
5DH–23142–L0	D – 9
	D – 10
5HD–23144–L0	D – 9
	D – 10
5ET–23145–L0	D – 9
	D – 10
4SS–23146–L0	D – 9
	D – 10
5DH–23149–L0	D – 9
	D – 10
4SS–23153–L0	D – 9
	D – 10
4SS–23158–L0	D – 9
	D – 10
5NL–2316A–00	D – 9
	D – 10
5NL–2316A–10	D – 9
	D – 10
5MV–23170–L0	D – 9
	D – 10
5ET–23171–L0	D – 9
	D – 10
5DH–23183–00	D – 6
509–23184–L0	D – 6
5DH–23195–L0	D – 9
	D – 10
5MV–23195–L0	D – 9
	D – 10
5HC–2331E–00	D – 11
5NL–23340–00	D – 10
4SS–23346–L0	D – 11
5MV–23346–L0	D – 10
3SP–23356–L0	D – 11
4SS–23364–L0	E – 13
4DA–23389–00	D – 8
5HD–2339E–00	D – 8
5HD–23393–L0	D – 9
	D – 10
4EW–23416–00	D – 8
5NL–23435–00	D – 8
3SP–23441–00	D – 8
5HD–23485–10	D – 8
5JG–24110–50	D – 12
4EW–2412F–00	D – 12
24X–24144–00	D – 12
3SP–24173–00	D – 12
22W–24181–00	C – 4

PART NO.	GRID NO.
4SS–24181–00	D – 12
5BE–24182–00	D – 12
3JD–24186–00	D – 12
5JG–24240–50	D – 12
3XJ–24380–00	D – 12
4DP–24500–00	D – 12
4X8–24512–00	D – 12
3AJ–24523–00	D – 12
3AJ–24534–00	D – 12
5MV–24610–00	D – 12
5JG–24710–50	D – 13
5BE–24728–00	D – 13
5JG–24731–50	D – 13
4DA–25104–00	D – 14
4SS–25111–01	D – 14
5DH–25117–00	D – 14
5BE–25181–00	D – 14
5DH–25183–00	D – 14
5BE–25186–00	D – 14
5HD–25304–00	E – 2
5ET–25311–00	E – 2
5ET–25317–00	E – 2
4XM–25364–00	E – 2
5ET–25367–00	E – 3
5ET–25381–00	E – 3
5ET–25383–00	E – 3
5ET–25388–00	E – 3
5ET–25389–00	E – 3
2J5–25394–01	D – 14
4XM–25394–00	E – 2
5ET–25447–00	E – 2
5ET–25448–00	E – 2
5ET–25449–00	E – 2
5ET–25450–00	E – 2
5ET–25451–00	E – 2
5ET–25452–00	E – 2
8CR–25715–00	E – 6
5DH–25718–01	E – 4
5MV–2580T–10	D – 15
5GR–2580W–00	E – 4
5MV–2580W–00	E – 4
5MV–2581T–00	D – 15
4ML–2582A–50	E – 8
5DH–2582W–00	E – 4
5DH–25827–50	E – 4
5DH–25828–50	E – 4
5JG–2583V–00	E – 8
5MV–25833–00	E – 6

PART NO.	GRID NO.
5BE–25844–01	E – 8
5BE–25852–00	E – 8
5MV–25852–00	E – 6
56A–25854–00	E – 6
	E – 8
2VN–25866–00	E – 8
5MV–25867–00	E – 6
5G2–25868–00	E – 6
5ET–25872–00	E – 6
5MV–25873–00	E – 8
5DH–25875–00	D – 15
2VM–25876–00	E – 8
3FV–2589A–00	E – 8
5MV–2589F–00	E – 6
5BE–25894–00	E – 8
5BE–25895–00	E – 8
5DH–25916–00	D – 15
	E – 4
5DH–25919–00	D – 15
5DH–25919–50	E – 4
8CR–25924–00	E – 4
5DH–25933–00	D – 15
4XM–26111–00	E – 5
5BE–26240–00	E – 5
4GY–26241–00	E – 5
4GY–26242–00	E – 5
3Y1–26249–00	E – 5
5BE–26281–00	E – 5
5BE–26282–00	E – 5
5JG–26302–50	E – 5
5JG–26335–00	E – 5
5HD–26337–00	E – 10
5HD–26342–00	E – 5
583–26352–00	E – 10
5HD–26372–00	E – 10
5MV–26372–00	E – 6
4XM–27200–00	E – 7
5JG–27217–00	E – 7
3SP–27222–00	E – 8
5ET–27311–00	E – 7
5ET–27411–00	E – 7
5ET–27421–00	E – 7
4GY–27491–00	E – 4
5BE–2814F–00	C – 15
5ET–28166–00	C – 15
4SR–82310–00	E – 11
5BE–82370–00	E – 11
5NL–82509–00	E – 11

PART NO.	GRID NO.
5BE–82540–01	E – 11
5HD–82911–00	E – 10
5BE–82912–00	E – 10
38V–82913–00	E – 10
5MV–83912–00	E – 10
5BE–83913–00	E – 10
5MV–83922–00	E – 6
5HD–83951–00	E – 10
23X–83976–00	E – 10
583–83981–00	E – 10
5NL–85540–00	E – 11
5NL–85546–00	E – 11
5JG–85550–11	E – 9
5BE–85560–10	E – 9
5JG–85885–00	C – 3
9Y581–92111	E – 3
90101–06001	C – 7
90101–06664	C – 13
90101–08777	E – 3
90105–065A1	C – 6
90105–06553	C – 5
	C – 11
	D – 2
	E – 8
90105–06690	D – 2
90105–067A6	B – 2
90105–08099	C – 14
90105–08659	D – 15
90105–09002	B – 2
90105–09555	B – 2
90105–10323	D – 6
90105–105A2	D – 7
90105–10733	C – 14
90109–06027	E – 10
90109–063F8	C – 12
90109–06418	B – 7
90109–065G2	B – 12
90109–065G4	E – 4
90109–066F0	B – 3
90109–081G1	E – 3
90109–082G0	C – 7
90109–142F4	D – 5
90109–147F2	D – 5
90110–08096	C – 14
90116–06541	B – 2
90119–05071	D – 8
90119–06001	C – 15
90119–06096	D – 2

PART NO.	GRID NO.
90119–06214	D – 12
90119–06225	D – 8
90119–08238	D – 3
90122–06035	B – 13
90149–06011	D – 12
90149–06126	C – 5
90149–06250	B – 4
90149–06324	E – 9
90149–06326	C – 5
90149–06327	D – 15
90151–04048	D – 4
90152–06010	C – 7
90154–05073	E – 11
90157–08028	C – 15
90159–06078	D – 3
90159–06092	C – 8
90159–06182	D – 3
90170–14171	B – 4
90170–16326	C – 8
90170–24373	D – 8
90179–06568	D – 4
90179–08299	E – 3
90179–10247	E – 9
90179–16672	D – 14
90179–18001	C – 8
	C – 11
90179–28650	D – 8
90183–06023	B – 13
	D – 2
90185–08169	C – 14
	E – 3
90185–14112	D – 5
90185–16127	D – 4
90185–20168	E – 3
90201–03313	B – 13
90201–06071	B – 9
90201–06557	D – 2
90201–080H1	C – 8
90201–08089	E – 7
90201–081R9	C – 4
90201–08326	C – 7
	E – 3
90201–08410	C – 3
90201–08512	B – 8
90201–086P8	C – 14
90201–096J9	B – 2
90201–101J1	E – 9
90201–10118	E – 6

PART NO.	GRID NO.
90201–10118	E – 8
90201–10119	E – 7
90201–112U6	D – 7
90201–12166	B – 10
90201–14740	D – 5
90201–15701	C – 6
90201–162H4	C – 7
90201–164H4	D – 4
	D – 5
90201–167P7	C – 7
90201–177G4	C – 7
90201–203U1	E – 3
90201–20685	C – 7
90201–247L2	D – 8
90201–286K9	D – 8
90202–05193	D – 12
90202–08045	B – 14
90202–08204	C – 15
90206–06090	C – 4
90209–06096	B – 13
90209–20008	C – 10
90209–23012	C – 10
90215–14204	B – 4
90215–16289	C – 8
90215–20003	C – 8
	C – 10
90240–08120	E – 7
90240–10142	E – 7
90267–32070	B – 13
90267–48121	C – 4
90280–03001	B – 4
90338–16148	C – 14
	D – 4
90340–12112	B – 2
90340–14128	C – 6
90340–32123	C – 6
90387–06009	D – 2
90387–0614M	B – 9
90387–0701A	D – 2
90387–0814J	C – 4
90387–086N4	C – 14
90387–124F4	C – 13
90387–16005	D – 4
90387–16007	D – 4
90387–167Y9	D – 4
90387–1712Y	C – 5
90387–1714R	D – 4
90387–1714S	D – 4

PART NO.	GRID NO.
90387–20006	C – 10
90387–22001	C – 10
90387–225N2	E – 5
90401–08038	B – 12
90401–10159	B – 12
90401–10172	E – 6
	E – 8
90430–06014	B – 2
	B – 7
	B – 8
90430–08119	B – 12
	C – 14
90430–10188	B – 12
	C – 5
90430–18130	C – 14
90445–09104	D – 12
90445–09220	D – 12
90445–11002	D – 12
90445–112K0	B – 3
90450–22017	B – 9
	B – 10
90450–25037	B – 9
90450–32015	B – 9
90450–54093	B – 13
90450–57092	B – 13
90450–61001	B – 13
90460–15126	E – 11
90464–13073	E – 11
90464–13077	E – 11
90464–15152	E – 11
90464–16061	E – 11
90465–08029	C – 6
90465–10013	C – 5
90465–13275	E – 11
90465–16258	E – 6
90467–09006	B – 9
90467–10008	D – 12
90467–11106	B – 3
90467–12085	E – 8
90467–14015	B – 3
90467–17089	B – 13
90468–16191	E – 7
90480–08608	E – 3
90480–15528	B – 9
90480–18549	D – 12
90501–043E0	B – 12
90501–052G5	C – 13
90501–06022	C – 12

PART NO.	GRID NO.
90501–12081	C – 7
90501–16107	C – 7
90501–224J9	C – 8
90506–16500	E – 7
90508–142B5	C – 9
90508–162B2	B – 7
90508–26561	C – 12
90508–282B8	E – 7
90508–282B9	E – 7
90508–291A8	C – 13
90508–30743	C – 7
91A20–05065	B – 9
91314–06030	B – 10
91316–04008	B – 14
91316–04012	B – 14
91317–05008	D – 4
91317–05014	B – 13
91317–06014	E – 6
91317–06016	E – 11
91317–06025	B – 10
91317–06045	C – 5
91317–06055	C – 5
91317–06070	C – 5
91317–08020	C – 4
91401–20012	E – 7
91401–25015	E – 7
91808–16023	B – 2
91812–16001	C – 6
92014–06016	E – 8
92017–08055	C – 14
92907–06100	D – 13
92907–06600	B – 7
92907–08200	D – 15
93101–14164	C – 6
93102–12106	B – 8
93102–12224	B – 7
	C – 8
	C – 13
93102–18278	C – 7
93102–26468	D – 14
93102–28008	C – 10
93106–22019	D – 4
93106–30044	E – 2
93106–30045	E – 2
93109–11073	B – 8
93109–20076	D – 4
	D – 5
93109–28043	D – 4

PART NO.	GRID NO.
93210–07003	B – 12
93210–07135	B – 12
93210–09008	B – 12
93210–10197	B – 10
	C – 5
93210–11073	E – 7
93210–12759	B – 12
93210–14369	C – 6
93210–15414	B – 9
93210–15620	E – 8
93210–16716	C – 6
93210–17570	C – 7
93210–19123	C – 15
93210–196A4	C – 10
93210–21276	E – 11
93210–32172	C – 6
93210–42263	D – 9
	D – 10
93210–47675	B – 12
93300–60804	C – 14
93306–00105	B – 8
93306–00317	C – 10
93306–00320	C – 10
93306–07202	E – 2
93306–20335	B – 4
93306–20447	C – 10
93306–20648	B – 4
93306–27205	E – 2
93306–27208	C – 10
93306–90403	D – 14
93306–90501	C – 12
93310–63003	B – 4
93311–32261	B – 4
93315–11206	C – 8
93315–32056	D – 4
	D – 5
93317–22262	D – 4
93332–00068	D – 8
93332–00081	D – 8
93340–21008	C – 8
93342–22217	D – 4
93410–20038	C – 7
93410–22039	C – 10
93410–26067	C – 10
93420–16086	B – 4
93440–07149	B – 2
93440–07182	B – 8
	C – 8

PART NO.	GRID NO.
93440–10153	B – 2
	B – 10
93440–41178	B – 7
93503–08007	B – 12
93507–32009	C – 7
93511–32027	C – 8
93603–16219	B – 10
93604–10011	B – 8
93608–33002	C – 13
93612–16254	B – 3
	C – 5
9383B–13218	C – 10
94108–21008	D – 14
94108–2110Y	D – 14
94108–2112Y	D – 14
94110–1911A	E – 2
94110–1913B	E – 2
94110–1916A	E – 2
94209–21229	D – 14
94210–19222	E – 2
94210–19224	E – 2
94227–21101	D – 14
94309–21161	D – 14
94316–19156	E – 2
94321–19135	E – 2
94330–21084	D – 14
94416–21002	D – 14
94418–19002	E – 2
94591–53114	B – 7
94681–68001	E – 3
94701–00318	B – 2
94701–00319	B – 2
94701–00329	B – 2
94701–00330	B – 2
94703–00318	B – 2
94703–00319	B – 2
94703–00329	B – 2
94703–00330	B – 2
95024–06020	B – 10
95027–06010	C – 9
	D – 4
95027–06012	B – 2
	B – 8
	B – 9
	B – 12
	B – 13
	C – 15
	E – 4

PART NO.	GRID NO.
95027–06016	D – 12
	E – 4
95027–06020	C – 13
95027–06025	B – 7
	B – 8
	B – 9
	B – 10
	B – 11
	B – 12
	C – 6
95027–06035	B – 3
	C – 6
95027–06050	D – 4
95027–06065	B – 8
	B – 12
95027–08012	C – 15
95027–08020	D – 15
95027–08035	D – 8
95027–08040	C – 14
	D – 8
95027–08065	C – 14
95027–10016	C – 5
95301–08700	E – 8
95607–05100	B – 13
	E – 10
95607–06100	E – 10
95607–10200	C – 14
	D – 7
95617–08620	B – 2
95617–14100	D – 5
95701–06500	E – 6
95704–06500	B – 3
95707–08500	B – 2
	C – 14
95817–08016	C – 4
	C – 15
95817–08030	C – 4
95817–10050	C – 14
95817–10130	C – 14
95827–06010	B – 9
95827–06012	D – 15
95827–06014	B – 7
95827–06016	D – 3
95827–08012	C – 14
97007–05016	E – 10
97007–06012	D – 13
97027–06016	B – 7
97707–60016	D – 2

PART NO.	GRID NO.
97780–50510	E – 8
97801–03008	D – 12
98507–05020	E – 5
98507–06025	C – 5
98706–04012	E – 6
98706–04040	E – 8
98707–06025	D – 12
98907–05020	E – 10
98907–06020	D – 12
98980–06008	C – 4
99001–08600	B – 10
99009–12400	B – 10
99009–16400	C – 7
99009–17400	C – 7
99009–22500	C – 6
99009–45500	E – 2
99244–00200	D – 5
99530–08012	B – 10
99530–08016	C – 6
99530–10114	B – 10
	C – 5
99530–10116	C – 5

CONTENTS

ENGINE

CYLINDER B2
CRANKSHAFT. PISTON B4
VALVE B5
CAMSHAFT. CHAIN B7
WATER PUMP B8
RADIATOR. HOSE B9
OIL PUMP B10
OIL CLEANER B12
INTAKE B13
CARBURETOR B14
EXHAUST C4
CRANKCASE C5
CRANKCASE COVER 1 . . . . . C6
STARTER C7
CLUTCH C8
TRANSMISSION C10
SHIFT CAM. FORK C12
SHIFT SHAFT C13

CHASSIS

FRAME C14
FENDER D2
SIDE COVER D3
REAR ARM D4
REAR SUSPENSION D6
STEERING D8
FRONT FORK D9
FUEL TANK D12
SEAT D13
FRONT WHEEL D14
FRONT BRAKE CALIPER D15
REAR WHEEL E2
REAR BRAKE CALIPER E4
STEERING HANDLE. CABLE E5
FRONT MASTER CYLINDER E6
STAND. FOOTREST E7
REAR MASTER CYLINDER E8
GENERATOR E9
HANDLE SWITCH. LEVER E10
ELECTRICAL 1 . . . . . E11
ALTERNATE (CHASSIS) E12

INDEX

NUMERICAL INDEX M1